Installation Manual

Viega Climate Panel® Heating System

Table of Contents

1 **About this Document** ____ **7**
1.1 Disclaimer ____ 7
1.2 Symbols Used ____ 7

2 **System Advantages** ____ **8**
2.1 Why is Radiant so Comfortable? ____ 8
2.1.1 Radiant Floor ____ 8
2.1.2 Radiators ____ 8
2.1.3 Baseboard (Natural Convection) ____ 9
2.1.4 Forced Air ____ 9
2.2 Radiant Application Benefits ____ 10

3 **System Design** ____ **11**
3.1 Creating a Climate Panel Material List ____ 11
3.2 Heat Loss Calculations for Floor Heating Systems Using LoopCAD ____ 12
3.3 Calculating the Supply Water Temperature ____ 13
3.4 Calculating the Floor Surface Temperature ____ 14
3.5 Calculating the Pressure Drop ____ 15
3.6 Selecting a Circulator Pump ____ 16
3.7 Mixing Station Pump Performance ____ 17
3.8 Enhanced Mixing Station Pump Performance ____ 18
3.9 Pump Curve for Hydronic Mixing Block ____ 20
3.10 Typical Cross Sections ____ 21
3.10.1 Section through Climate Panel Installation above Subfloor with Hardwood Finish Floor ____ 21
3.10.2 Section through Climate Panel Installation above Subfloor with Tiles ____ 22
3.10.3 Section through Climate Panel Installation above Subfloor with Carpet ____ 23
3.10.4 Section through Climate Panel Installation above Subfloor with Linoleum or Vinyl Finish Floor ____ 24
3.10.5 Section through Climate Panel Installation on Existing Slab with Plywood ____ 25
3.10.6 Section through Climate Panel Installation on Existing Slab with Floating Floor ____ 26
3.10.7 Section through Climate Panel Installation in Wall ____ 27

4 **Climate Panel Installation** **28**
4.1 Layout Planning 28
4.2 Panel Installation 29
4.2.1 Step 1 29
4.2.2 Step 2 30
4.2.3 Step 3 32
4.2.4 Step 4 33
4.2.5 Step 5 34
4.2.6 Step 6 35
4.2.7 Step 7 36
4.3 Assembled Climate Panel Installation 37
4.3.1 Climate Panel Accessories 38
4.4 Tubing Installation 39

5 **Piping and Controls** **40**
5.1 Mixing Equipment and Manifolds 40
5.2 Single Temperature Radiant System 41
5.2.1 Single Temperature: Hydronic Mixing Block 42
5.2.1.1 Mechanical Schematic 42
5.2.1.2 Electrical Schematic 43
5.2.2 Single Temperature: Basic Heating Control 44
5.2.2.1 Mechanical Schematic 44
5.2.2.2 Electrical Schematic 44
5.3 Multiple Temperature Radiant System 45
5.3.1 Multiple Temperature: Hydronic Mixing Block 46
5.3.1.1 Mechanical Schematic 46
5.3.1.2 Electrical Schematic 46
5.3.2 Multiple Temperature: Basic Heating Control 47
5.3.2.1 Mechanical Schematic 47
5.3.2.2 Electrical Schematic 48
5.4 Zone wiring 48
5.5 Wiring Schematic: One-Zone Application 49
5.6 Wiring Schematic: Multi-Zone Application using Viega Powerheads 49
5.7 Wiring Schematic: Multi-Zone Application using Viega Zone Valves 50

6 **System Start-Up** **51**
6.1 System Start-Up for Hydronic Mixing Block 51
6.1.1 Pressure Testing 51
6.1.2 Filling and Purging 52
6.2 System Start Up for Mixing Stations 53
6.2.1 Pressure Testing 53
6.2.2 Filling and Purging 53
6.3 Adjusting the High-Limit Kit (Mixing Station) 54
6.3.1 Operation 54
6.4 Initial Balancing 55

7 **Finish Flooring** 56
7.1 Choosing a Finished Floor 56
7.1.1 Floor Surface Temperatures 56
7.1.2 Moisture 57
7.1.2.1 Dry Shrinkage 57
7.1.2.2 Wet Expansion 57

8 **Appendix A: R-Value Table Floor Coverings** 58

9 **Appendix B: Supply Water Temperature/BTU Output Charts** 59

10 **Appendix C: Repairing Damaged Tubing within Climate Panel** 60

11 **Appendix D: Tool List** 62
11.1 Installation (Power Tools) 62
11.2 Installation (Hand Tools) 62
11.3 Pre/Post Installation 62
11.4 Miscellaneous 62

12 **Appendix E: Making a Material List** 63
12.1 Climate Panel Material Worksheet 63
12.2 Piping and Controls Material Worksheet 63
12.2.1 One-Room Application Material Worksheet 63
12.2.2 Multiple-Room Application Material Worksheet 64

13 **Appendix F: Additional References** 65
13.1 Making a Press Connection 65
13.2 Making a Compression Connection 65
13.3 SVC Press Adapter 65
13.4 SVC Compression Adapter 65

14 **Limited Warranty** 66
14.1 Limited Warranty for Viega Heating and Cooling Solutions 66

List of Tables

Table 1	How to Estimate Amount of Materials	11
Table 2	Sample Estimate of Materials	11
Table 3	Viega Barrier PEX Tubing Data	15
Table 4	Pump Dimensions	16
Table 5	Pump 12126	16
Table 6	Pump 12127	17
Table 7	Pump 12121, 12123, and 12125	17
Table 8	Power Usage (Approximate)	18
Table 9	Position Descriptions	19
Table 10	Mixing Block 56160	20
Table 11	Maximum Circuit Length	28
Table 12	Climate Panel Accessories	38
Table 13	Single Temperature Radiant System Materials	41
Table 14	Primary Loop Sizing	41
Table 15	Multiple Temperature Radiant System Materials	45
Table 16	Climate Panel Material Worksheet	63
Table 17	One-Room Application Material Worksheet	63
Table 18	Multiple-Room Application Material Worksheet	64

1 About this Document

1.1 Disclaimer

This document is subject to updates. For the most current Viega technical literature please visit www.viega.us.

Viega products are designed to be installed by licensed and trained plumbing and mechanical professionals who are familiar with Viega products and their installation. **Installation by non-professionals may void Viega LLC's warranty.**

1.2 Symbols Used

The following symbols may be used within this document:

DANGER!
This symbol warns of possible life-threatening injury.

WARNING!
This symbol warns of possible serious injury.

CAUTION!
This symbol warns of possible injury.

NOTICE!
This symbol warns of possible damage to property.

Notes give additional helpful tips.

2 System Advantages

2.1 Why is Radiant so Comfortable?

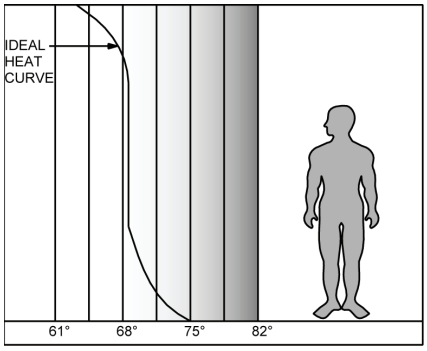

Even Heat Distribution
Ideal Heating Curve

For maximum comfort, the warmest temperature is at floor level and cooler temperatures are at head and ceiling levels. By comparing the four main heat distribution systems (see below) one can easily see that in forced air, radiators, and convective baseboard heating patterns, heat becomes trapped at the ceiling level, causing an inversion of the ideal heating pattern.

Q: Is there energy being wasted from certain heating systems?
A: Yes, the area between the ideal heating curve and each specific heating system curve represents wasted energy, which causes higher monthly fuel bills.

2.1.1 Radiant Floor

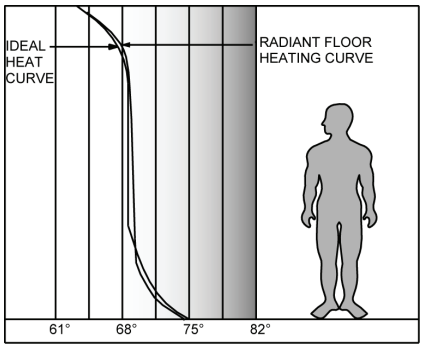

- Entire floor surface area is in effect a low temperature radiator.
- Warms other surfaces in that room and they, in turn, become heat emitters.
- Has superior energy efficiency.

2.1.2 Radiators

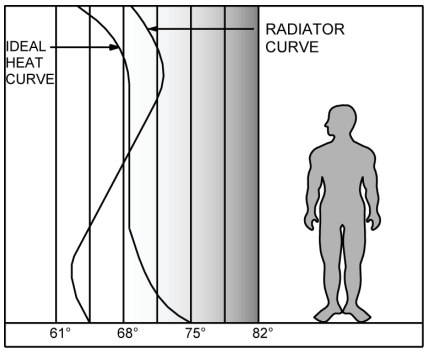

- Most of the heat is delivered by convection.
- Operates at high water temperatures.
- Creates convective warm air currents.

2.1.3 Baseboard (Natural Convection)

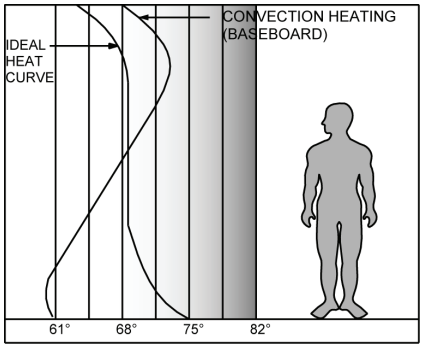

- Has minimal surface area.
- Operates at high water temperature.
- Tends to create uneven pools of warmth.

2.1.4 Forced Air

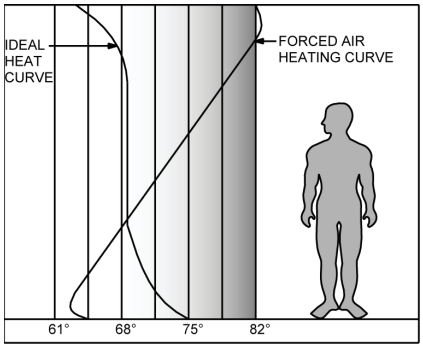

- Drafts may occur.
- High temperature air may be blown at occupants.
- Exact opposite of the ideal heat curve, i.e., cold feet and hot head.

2.2 Radiant Application Benefits

- Fast installation.
- No logistic problems associated with poured concrete (curing time, additional trades and scheduling).
- Minimal floor height build up.
- Low thermal mass means fast, dynamic response and minimal flywheel effect.
- Compatible with all flooring choices.

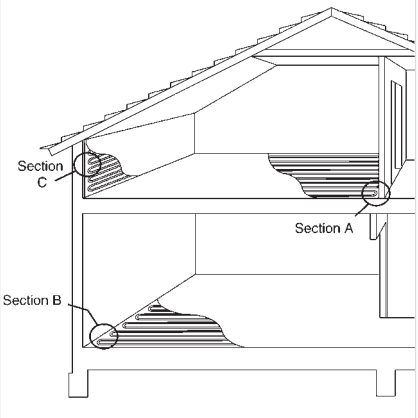

A - Wood subfloor:

- Ideal for wood frame construction, Climate Panels add no moisture to the building structure.

B - Existing concrete:

- A Climate Panel System on top of an existing concrete floor is a simple retrofit solution.

C - Walls:

There are very few limits with wall heating.

- Immediately increases the comfort and value of the building.
- Increases heated surface area for high heat loss rooms.
- Increased surface temperature.

Designers:

- No weight buildup reduces structural concerns.

Contractors:

- Contractor has complete control over a Climate Panel System installation.
- Tubing remains visible during finish floor installation.

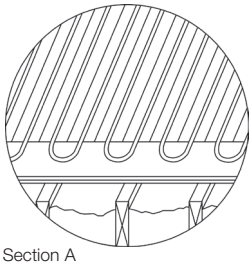

Section A

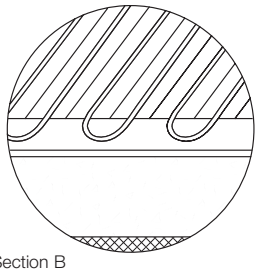

Section B

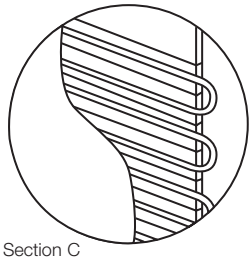

Section C

3 System Design

3.1 Creating a Climate Panel Material List

- Calculate the net heated area.
- Use this chart to make an initial material list for the net area to be heated.

Material	Net Heated Area (ft.)	Multiplier	Estimated Amount
7" Panels		0.4	
U-Turns		0.04	
Tubing (7" Spacing)		1.9	
Groove Tube		0.02	
Screws		5.4	
Staples		5.4	
Multi-run Panel		0.014	
Multi-run Access Panel		0.017	
Multi-run Ninety Panel		0.014	

Table 1: How to Estimate Amount of Materials

Equation:
Net Heated Area x Multiplier = Estimated Amount

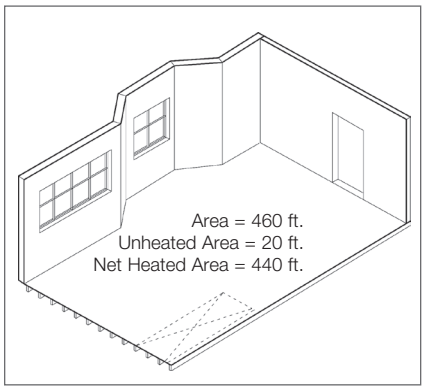

Use the room to the left accompanied with the chart below to practice estimating.

Material	Net Heated Area (ft.)	Multiplier	Estimated Amount
7" Panels	440	0.4	176
7" ACPs	440	0.07	31
U-Turns	440	0.04	18
Tubing (7" Spacing)	440	1.9	836
Groove Tube	440	0.02	9
Screws	440	5.4	2,376
Staples	440	5.4	2,376
Multi-run Panel	440	0.014	7
Multi-run Access Panel	440	0.017	8
Multi-runNinety Panel	440	0.014	7

Table 2: Sample Estimate of Materials

Solutions:
Remember this chart is only for estimating. The number of circuits in the area will be covered in section "4.1 Layout Planning" on page 28. Installer's preference determines choice of staples or screws.

3.2 Heat Loss Calculations for Floor Heating Systems Using LoopCAD

Viega's easy to use LoopCAD® software provides the opportunity to draw floor plans, calculate heat losses, draw tubing layouts, calculate materials lists, and much more. Customers can quickly and easily create professional drawings and quote Viega products. A free 30 day trial version is available for download at www.viega.us.

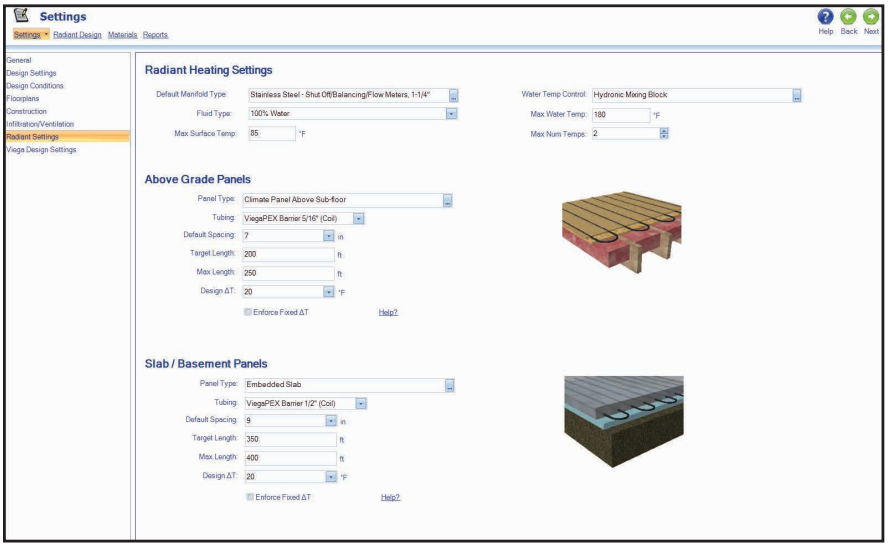

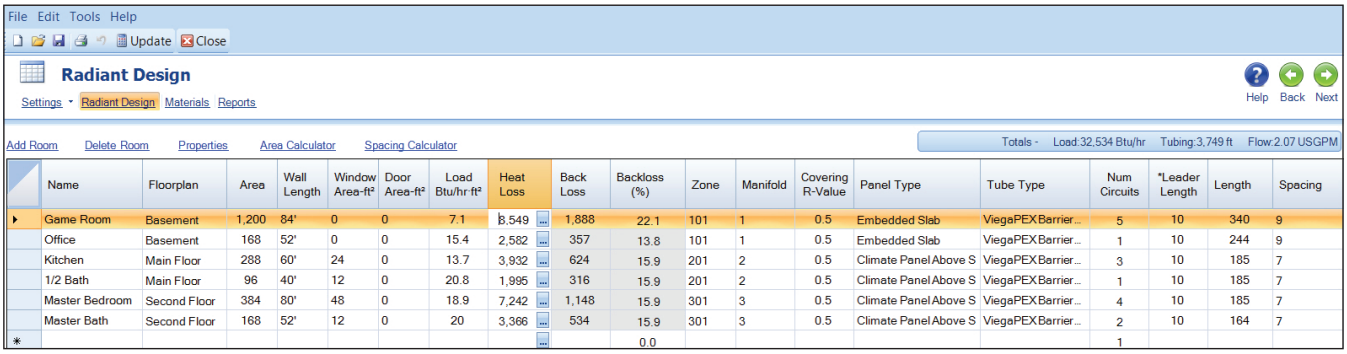

Name	Floorplan	Area	Wall Length	Window Area-ft²	Door Area-ft²	Load Btu/hr·ft²	Heat Loss	Back Loss	Backloss (%)	Zone	Manifold	Covering R-Value	Panel Type	Tube Type	Num Circuits	*Leader Length	Length	Spacing
Game Room	Basement	1,200	84'	0	0	7.1	8,549	1,888	22.1	101	1	0.5	Embedded Slab	ViegaPEXBarrier...	5	10	340	9
Office	Basement	168	52'	0	0	15.4	2,582	357	13.8	101	1	0.5	Embedded Slab	ViegaPEXBarrier...	1	10	244	9
Kitchen	Main Floor	288	60'	24	0	13.7	3,932	624	15.9	201	2	0.5	Climate Panel Above S	ViegaPEXBarrier...	3	10	185	7
1/2 Bath	Main Floor	96	40'	12	0	20.8	1,995	316	15.9	201	2	0.5	Climate Panel Above S	ViegaPEXBarrier...	1	10	185	7
Master Bedroom	Second Floor	384	80'	48	0	18.9	7,242	1,148	15.9	301	3	0.5	Climate Panel Above S	ViegaPEXBarrier...	4	10	185	7
Master Bath	Second Floor	168	52'	12	0	20	3,366	534	15.9	301	3	0.5	Climate Panel Above S	ViegaPEXBarrier...	2	10	164	7
									0.0						1			

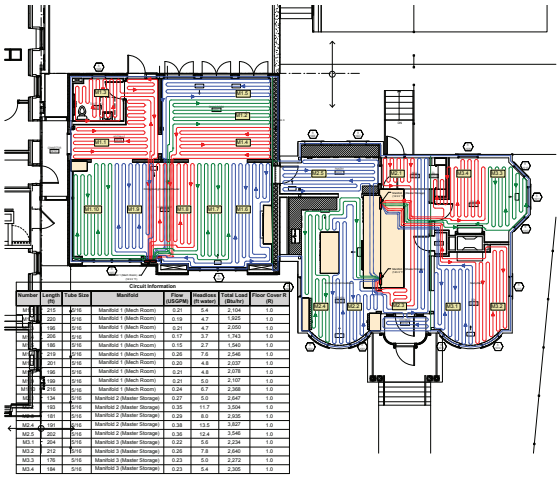

3.3 Calculating the Supply Water Temperature

Procedure:

1. Locate desired BTU output (from LoopCAD) on left vertical axis.
2. Follow to the right until you reach the selected total R-value curve.
3. Then move down to the horizontal axis and read the supply water temperature.

Example:

Output needed: 25 BTU/h/ft.^{2}
Finish floor R-value: .25
Supply water temperature: 117°F

(For additional Climate Panel BTU output charts, refer to "9 Appendix B: Supply Water Temperature/BTU Output Charts" on page 59.

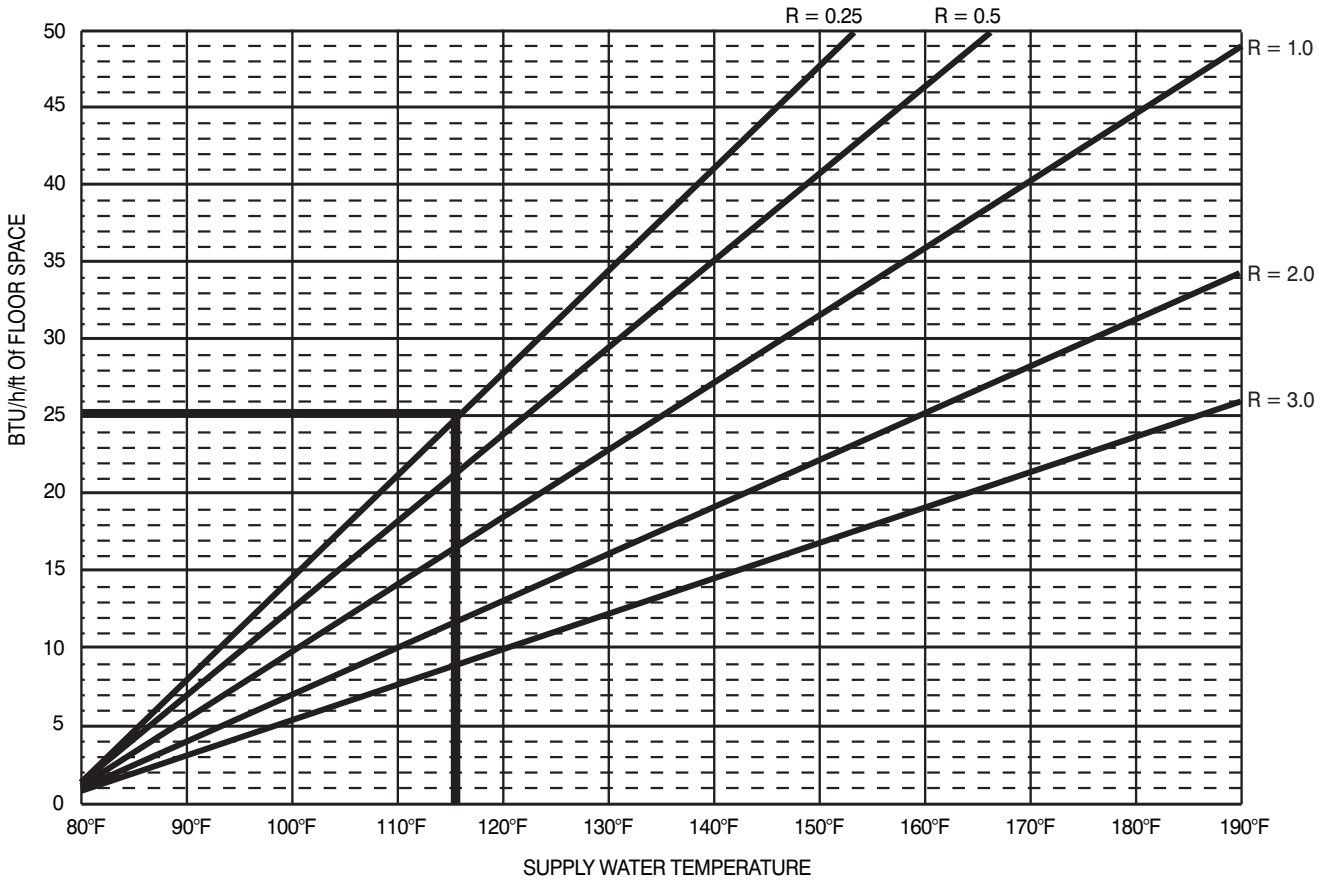

3.4 Calculating the Floor Surface Temperature

The chart below shows the relation between room temperature and floor surface temperature for floor heating systems. The relationship between BTU output and floor surface temperature plays an important role in certain finished floor applications (See "8 Appendix A: R-Value Table Floor Coverings" on page 58 for more information on finished flooring.)

Viega recommends that the floor surface temperature should not exceed 85° F because of potential damage to floor finishes. Also, at this temperature, the floor will begin to feel hot to the touch rather than comfortable.

In rooms that require a BTU output causing the floor surface temperature to exceed 85° F, wall heat or some kind of supplemental heat will need to be added.

Procedure:

1. Locate desired output (from LoopCAD or other source) on left vertical axis.
2. Follow to the right until you reach the curve.
3. Then move down to the horizontal axis and read the ΔT between the room temperature and the floor surface temperature.
4. Add the room temperature and the ΔT to get the floor surface temperature.

Example:

Output needed: 25 BTU/h/ft.^{2}
Room temperature: 68° F
Temperature ΔT (from chart): ~ 12° F
Floor surface temperature: 68° F + 12° F = 80° F

The floor surface temperature will be 80° F with 25 BTU/h/ft.^{2} output and 68° F room temperature.

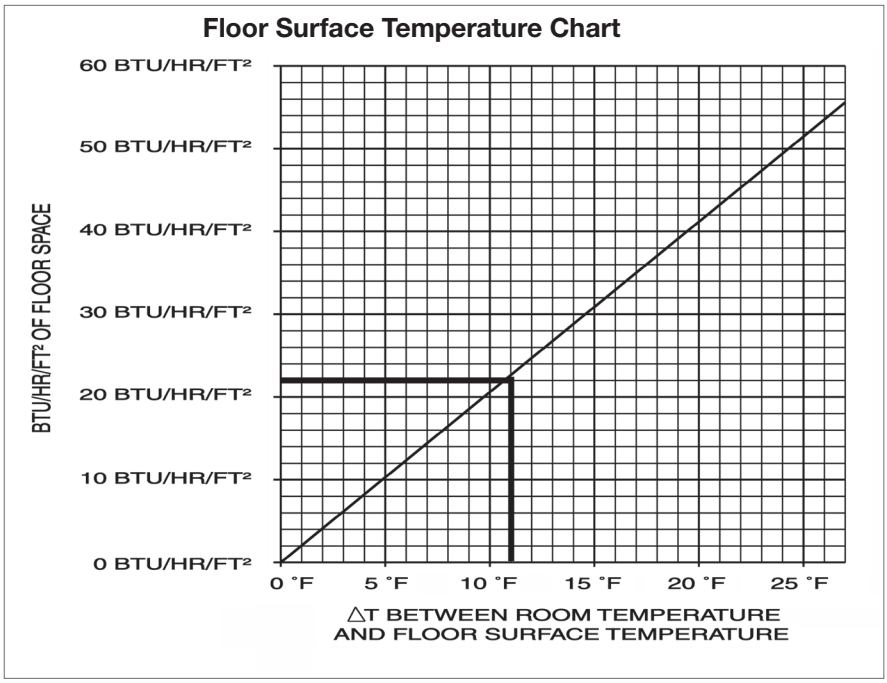

3.5 Calculating the Pressure Drop

In order to select the correct pump size for the system, the pressure drop must be calculated.

Procedure:

1. Use the Pressure Drop Chart below to locate desired flow rate for one circuit on the left vertical axis (receive circuit flow rate from the LoopCAD program).
2. Follow the chart below to find the selected tubing size.
3. Then, on the chart, move down to the horizontal axis and read the pressure drop in feet of head per foot of tubing.
4. Multiply pressure drop per foot by length of longest circuit.

Example:
GPM through 5/16" Viega Barrier PEX: 0.3 GPM
Pressure drop per foot: ~ .05 ft. of head/ft.
Total pressure drop: .05 x 250 total ft. = 12.5 ft. of head

Pressure Drop Chart

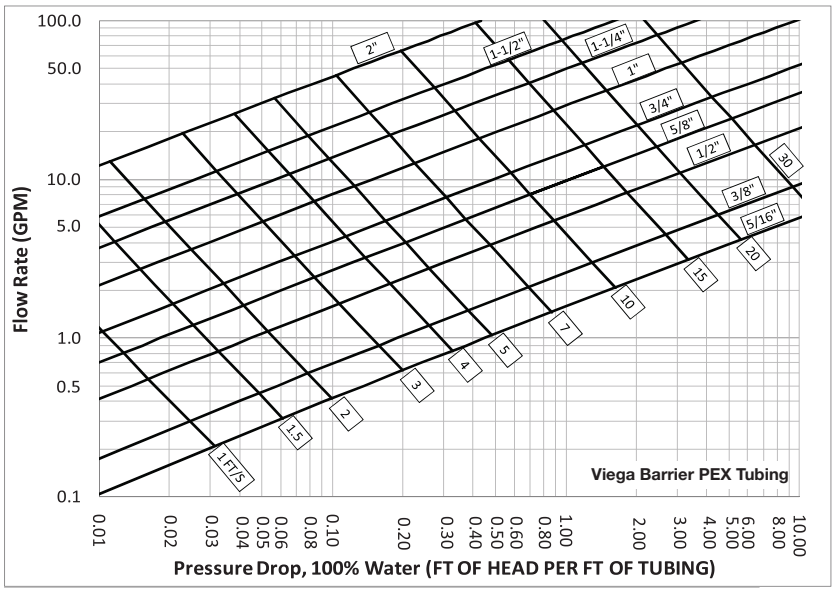

Viega Barrier PEX Tubing Data			
Nominal Size (in)	Outside Diameter (in)	Inside Diameter (in)	Water Content (in)
5/16*	0.430	0.292	0.004
3/8	0.500	0.350	0.005
1/2	0.625	0.475	0.009
5/8	0.750	0.574	0.014
3/4	0.875	0.671	0.018
1	1.125	0.862	0.030
1 1/4	1.375	1.053	0.045
1 1/2	1.625	1.243	0.063
2	2.125	1.629	.1083

** 5/16" used in Climate Panel installation.*

Table 3: Viega Barrier PEX Tubing Data

3.6 Selecting a Circulator Pump

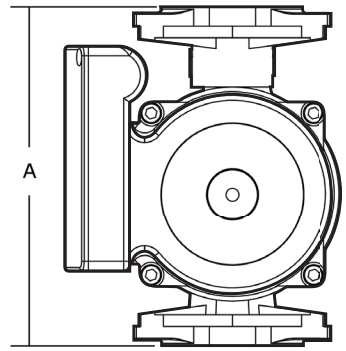

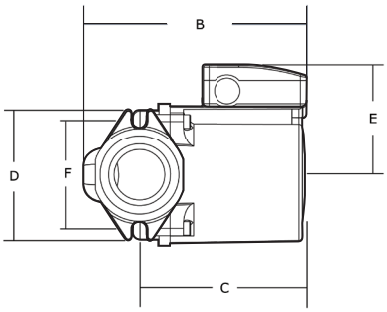

The pump must have a capacity equal to the system flow rate and a head equal to the system pressure loss. These two system characteristics are the primary factors when selecting a pump. Flow rates come from the LoopCAD program.

Refer to "3.5 Calculating the Pressure Drop" on page 15 to define the pressure drop or use the LoopCAD program. Remember when figuring pressure drop, use the highest pressure drop of all the circuits fed by their circulator. If the circulator can overcome that pressure drop, then it can overcome all the others.

Procedure:

1. Locate the pressure drop on the left vertical axis.
2. Locate the total system flow rate on the bottom horizontal axis.
3. Follow to the intersection of both variables.
4. Select the pump with a curve higher than this point.

Example:

Total GPM through 5/16" Viega Barrier PEX: 2 GPM
Longest circuit pressure drop: 12 ft of head
Pump selected: Low Head Pump, Medium Speed

Part Number	A	B	C	D	E	F
12126	6½"	5¼"	4"	4 3/16"	3"	3 5/32"
12127	6½"	6"	4⅞"	3½"	3 7/16"	3 5/32"

Table 4: Pump Dimensions

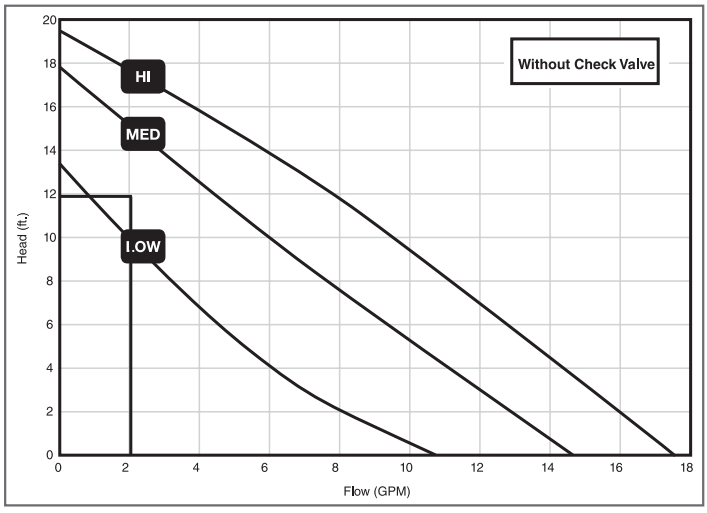

Part Number	Speed	Amps	Watts	HP
12126	HI	0.75	87	1/25
	MED	0.66	80	1/25
	LOW	0.55	60	1/25

Table 5: Pump 12126

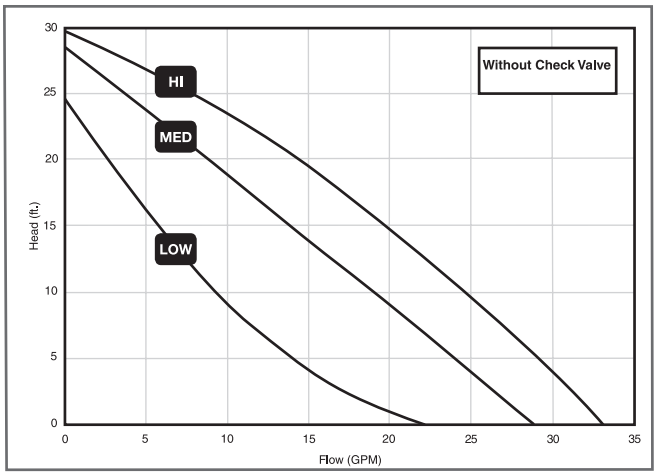

Part Number	Speed	Amps	Watts	HP
12127	HI	1.8	197	1/6
	MED	1.5	179	1/6
	LOW	1.3	150	1/6

Table 6: Pump 12127

3.7 Mixing Station Pump Performance

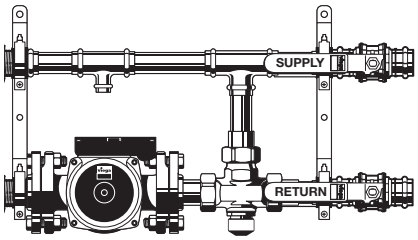

Flow Range: 0 to 34 U.S. GPM
Head Range: 0 to 30 feet
Motor: 2-Pole, Single-Phase, 120V
Maximum fluid temperature: 230°F (110°C)
Minimum fluid temperature: 36°F (2°C)
Maximum working pressure: 145 PSI

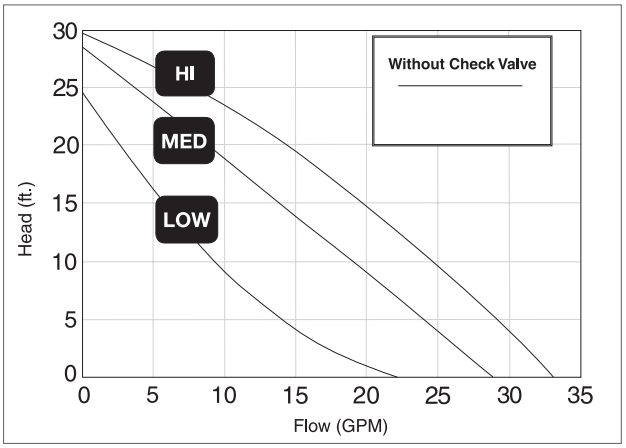

Part Number	Speed	Amps	Watts	HP
12121	HI	1.8	197	1/6
12123	MED	1.5	179	1/6
12125	LOW	1.3	150	1/6

Table 7: Pump 12121, 12123, and 12125

3.8 Enhanced Mixing Station Pump Performance

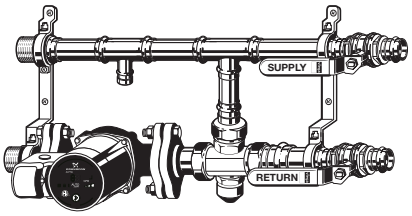

Performance* and operation mode selection

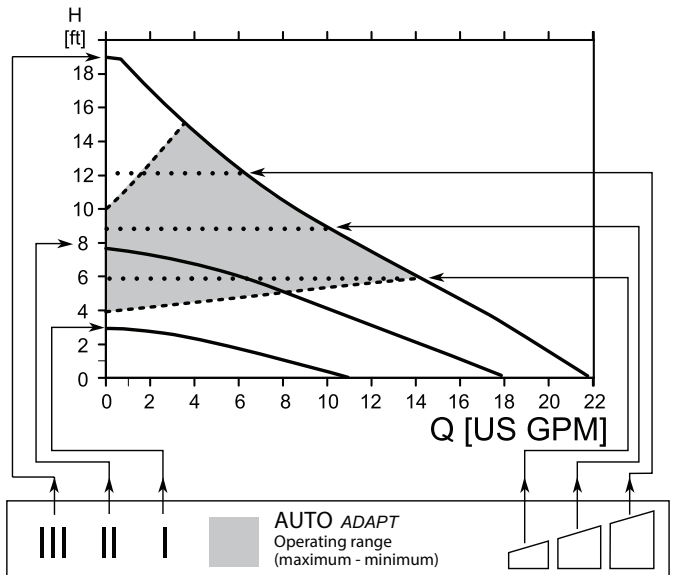

**Hydraulic performance without check valve*

Speed Setting	Position	Minimum	Maximum
High fixed speed	III	39W	45W
Medium fixed speed	II	15W	30W
Low fixed speed	I	5W	8W
Constant pressure		8W	45W
Constant pressure		14W	45W
Constant pressure		22W	45W
AutoADAPT	AUTO ADAPT	5W	45W

Table 8: Power Usage (Approximate)

Position	Description
	■ Push-button for selection of pump setting. ■ Every time the push-button is pressed, the circulator setting is changed.
III	**High Fixed Speed** Runs at a constant speed and consequently on a constant curve. In Speed III, the pump is set on the maximum curve under all operating conditions. Quick Vent of the pump can be obtained by setting the pump to Speed III for a short period.
II	**Medium Fixed Speed** Runs at a constant speed and consequently on a constant curve. In Speed II, the pump is set on the medium curve under all operating conditions.
I	**Low Fixed Speed** Runs at a constant speed and consequently on a constant curve. In Speed I, the pump is set on the minimum curve under all operating conditions.
	Constant Pressure I The duty point of the pump will move left and right along the lowest constant-pressure curve depending on water demand in the system. The pump head (pressure) is kept constant, irrespective of the water demand.
	Constant Pressure II The duty point of the pump will move left and right along the middle constant-pressure curve depending on water demand in the system. The pump head (pressure) is kept constant, irrespective of the water demand.
	Constant Pressure III The duty point of the pump will move left and right along the highest constant-pressure curve depending on water demand in the system. The pump head (pressure) is kept constant, irrespective of the water demand.
	AutoADAPT (Factory Setting) This function controls the pump performance automatically within the defined performance range (shaded area). AutoADAPT will adjust the pump performance to system demands over time.

Table 9: Position Descriptions

3.9 Pump Curve for Hydronic Mixing Block

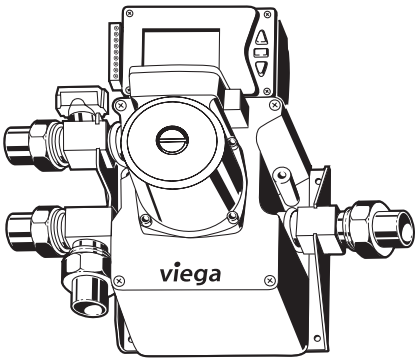

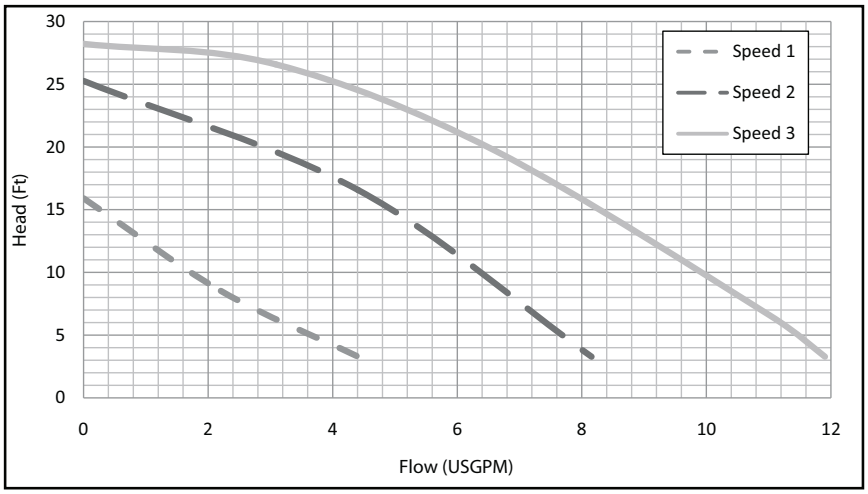

Part Number	Speed	Amps	Watts	HP
56160	3	1.12	130	1/25
	2	1.04	110	1/25
	1	0.78	80	1/25

Table 10: Mixing Block 56160

3.10 Typical Cross Sections

3.10.1 Section through Climate Panel Installation above Subfloor with Hardwood Finish Floor

- Screw or staple Climate Panels to the subfloor perpendicular to the direction of the hardwood floor.
- Stagger the seams of the Climate Panels.

- In crawl spaces or moisture problem basements, install PE vapor barrier underneath the floor joists.
- Hardwood floor should always be installed in accordance with the flooring manufacturer's instructions.
- Maximum floor surface temperature = 85° F.

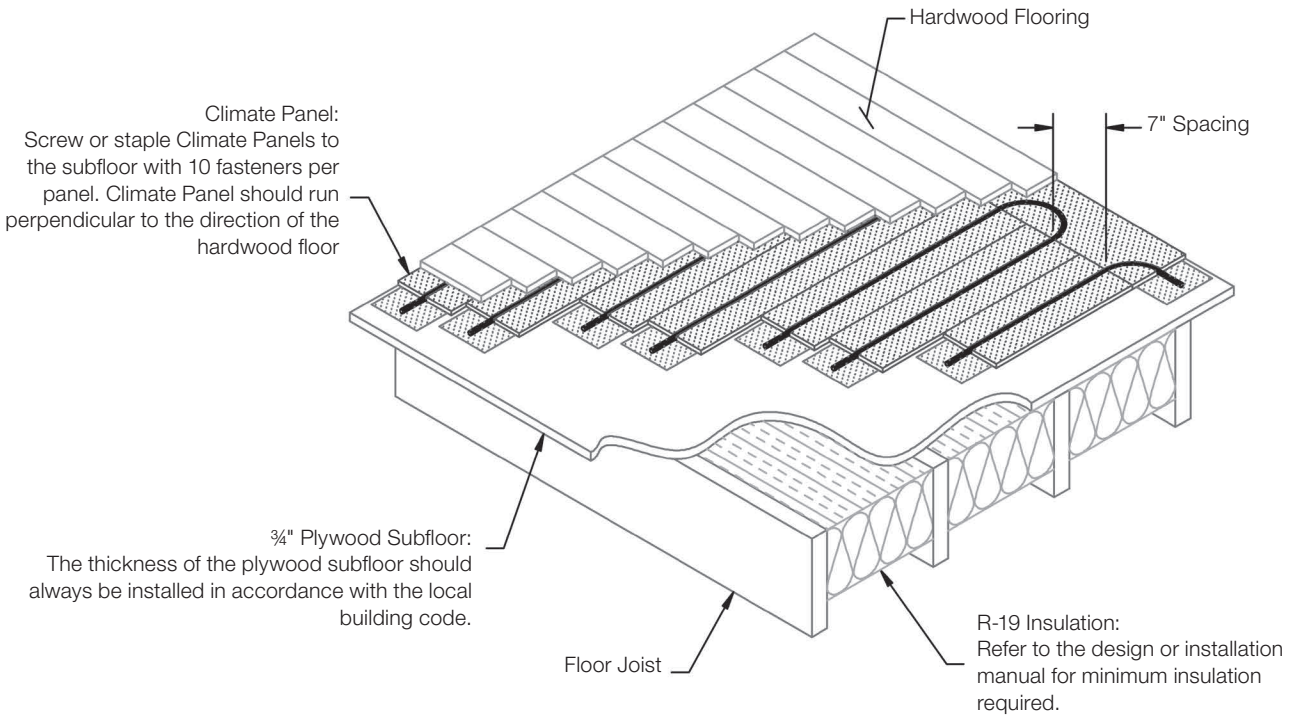

3.10.2 Section through Climate Panel Installation above Subfloor with Tiles

- Screw or staple Climate Panels to the subfloor.
- Glue and screw concrete fiberboard to Climate Panels.
- Set tiles into thin set.

- The thickness of the plywood subfloor should always be installed in accordance with the local building code.
- Maximum floor surface temperature = 85° F.

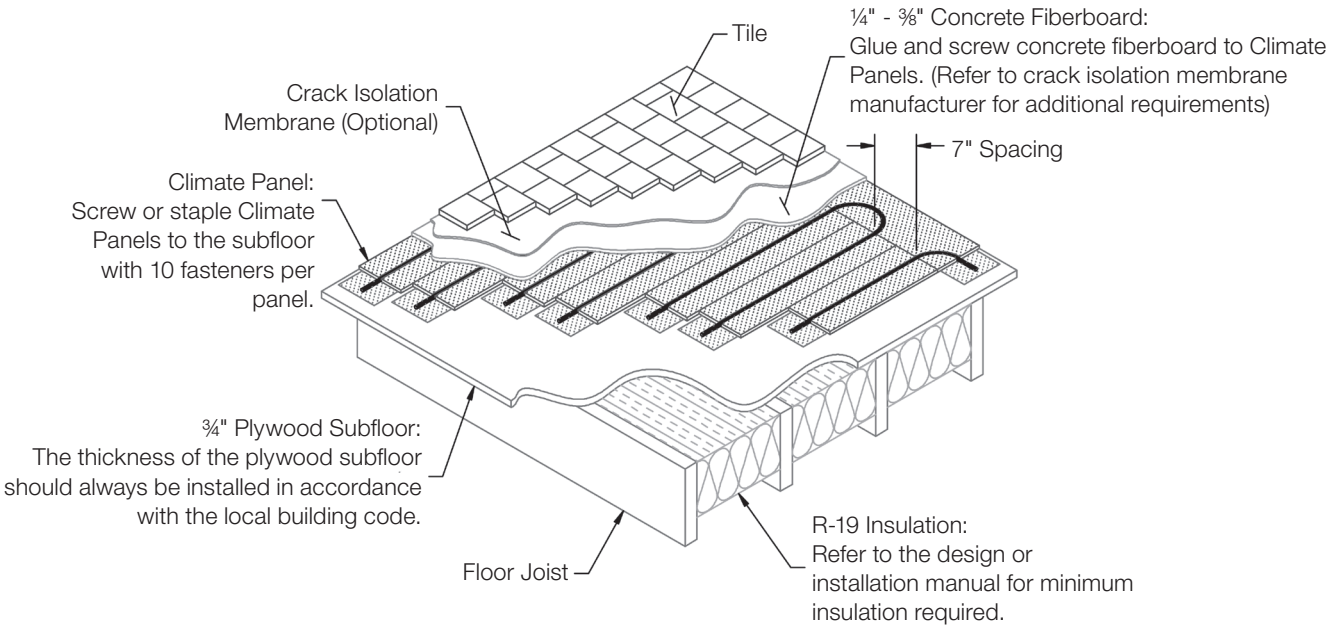

3.10.3 Section through Climate Panel Installation above Subfloor with Carpet

- Screw or staple Climate Panels to the subfloor.
- Install carpet and pad with nailing strips.
- For minimum height buildup, install carpet and pad directly over the Climate Panels.
- If height allows, a luan plywood cover sheet can be installed over the Climate Panel system.

- **Always stay below a total R-value of 2.5 above Climate Panels (pad plus the carpet).**
- Maximum floor surface temperature = 85° F.

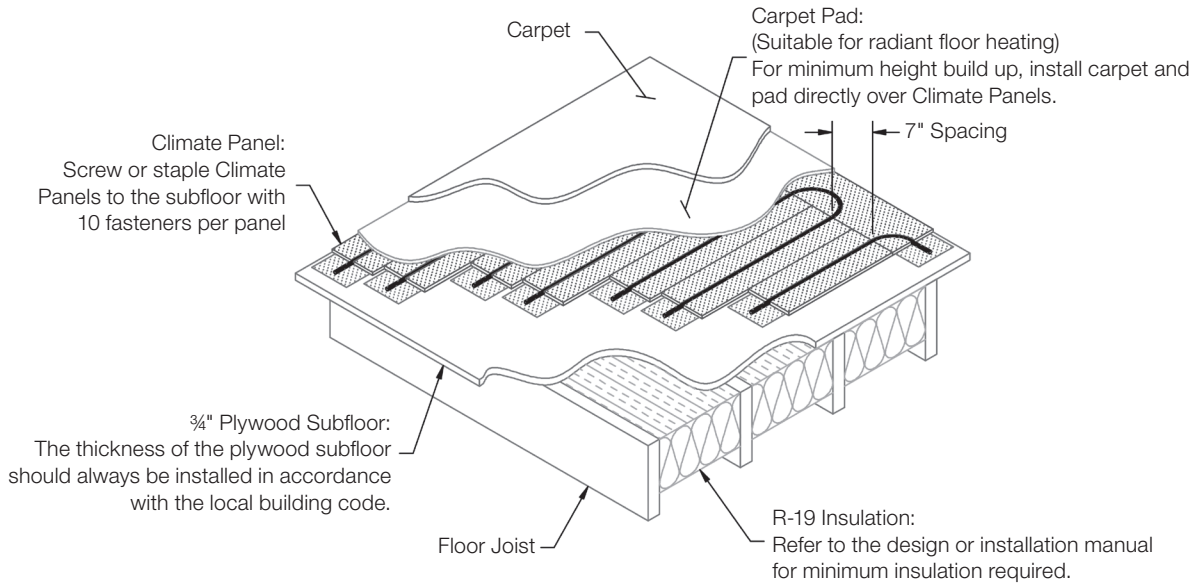

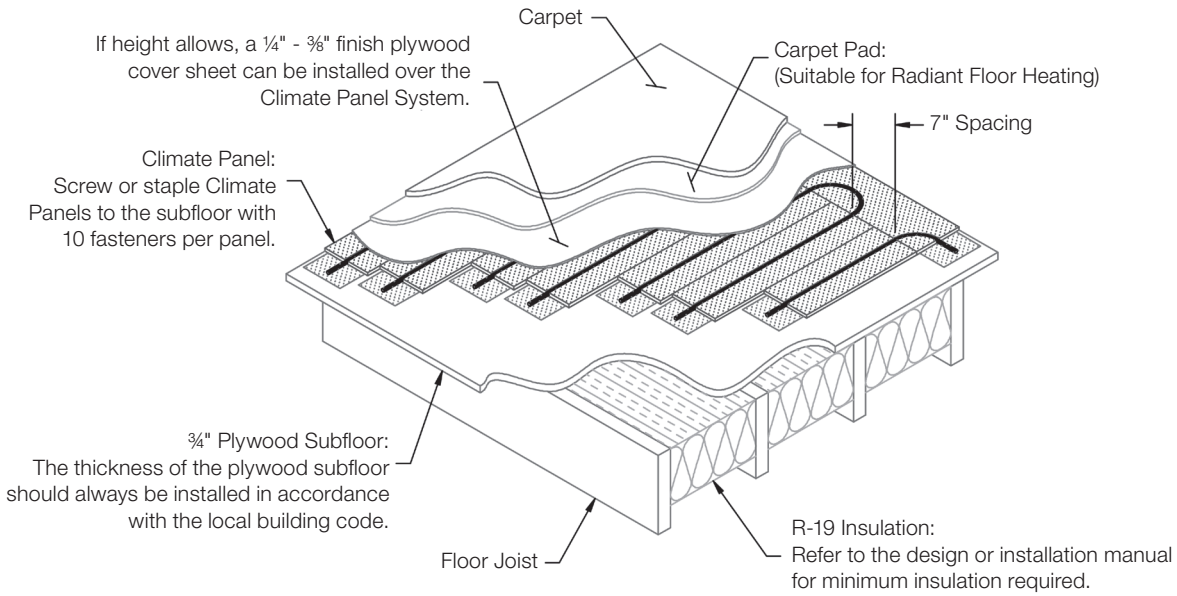

3.10.4 Section through Climate Panel Installation above Subfloor with Linoleum or Vinyl Finish Floor

- Screw or staple Climate Panels to the subfloor.
- Glue and screw plywood or concrete fiberboard to panels.
- Glue linoleum/vinyl to plywood or concrete fiberboard.
- Stagger the seams of the Climate Panels.

- Maximum floor surface temperature = 85° F.

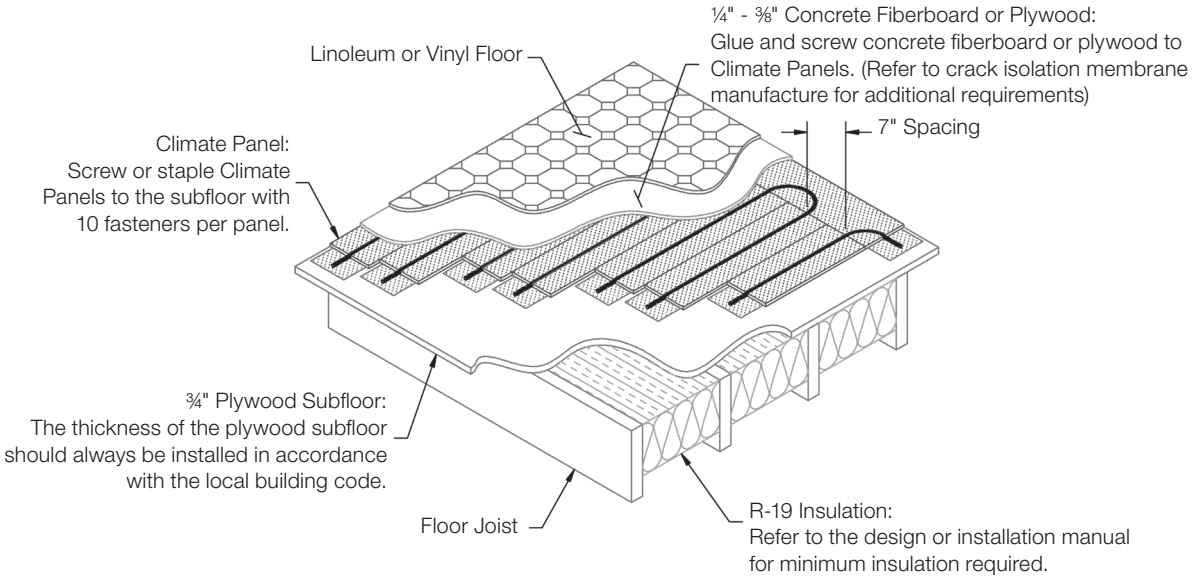

3.10.5 Section through Climate Panel Installation on Existing Slab with Plywood

- Cover level slab with 6 mil. (minimum) polyethylene film. Overlap edges 4 to 6".
- Loosely lay ¾" plywood sheets over entire floor.
- Stagger plywood joints every 4 ft. by cutting the first sheet of every other run in half.
- Fasten the plywood to the slab with a powder-actuated concrete nailer or hammer-driven concrete nails.
- Screw Climate Panels to plywood.

- **Slab must be level prior to Climate Panel Installation.**

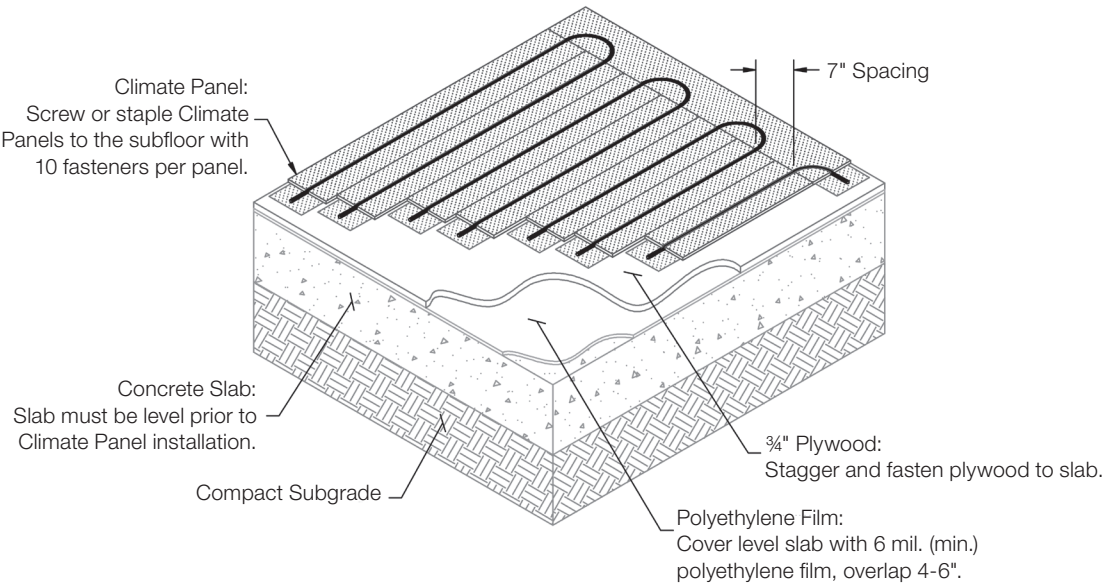

3.10.6 Section through Climate Panel Installation on Existing Slab with Floating Floor

- Lay foam pad over level slab.
- Float Assembled Climate Panel (ACP).
- Tape all joints.
- Install floating floor system over Climate Panels.

- **Slab must be level prior to Climate Panel Installation.**

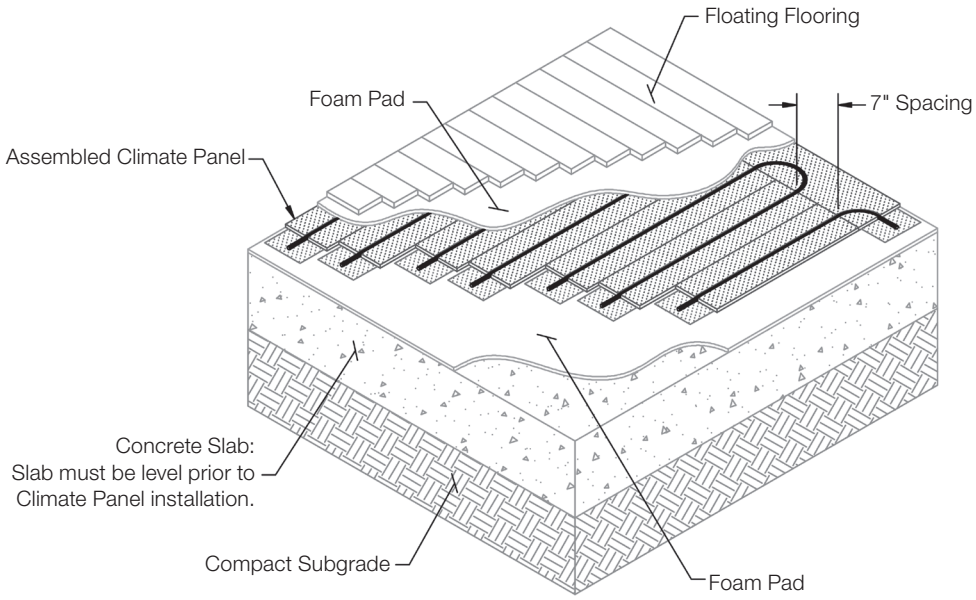

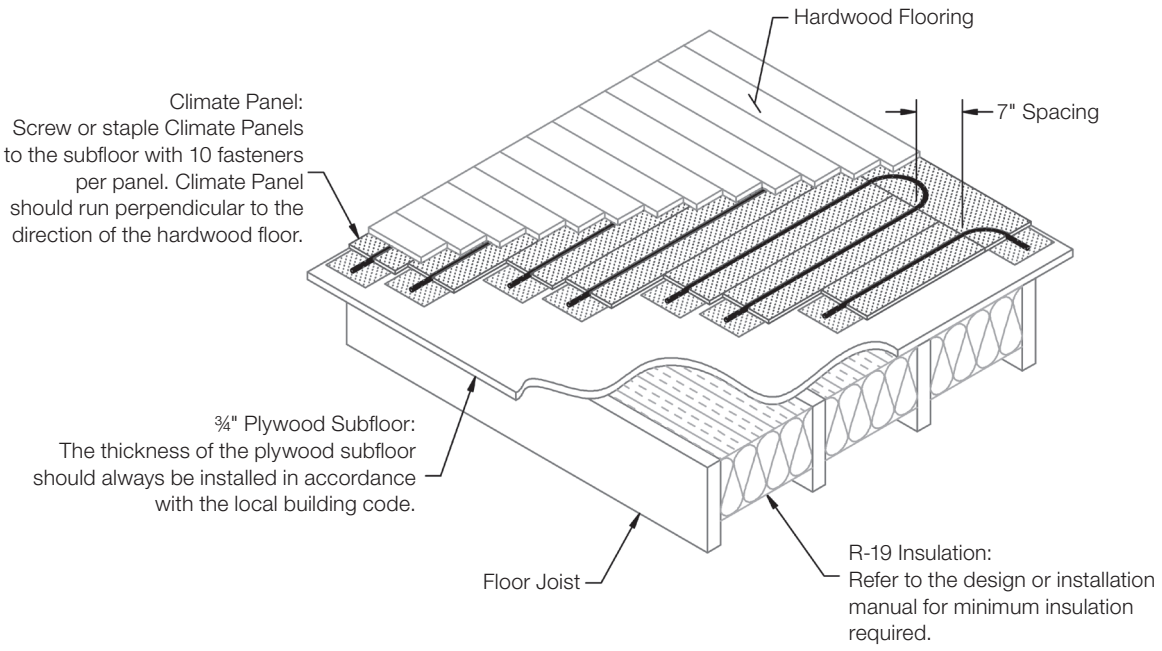

3.10.7 Section through Climate Panel Installation in Wall

- Start at the floor level on the outside wall.
- Install Climate Panels parallel to the floor.
- Install Climate Panels six rows high to avoid interference with window and picture placement.
- Screw Climate Panels to the studs on both sides of the groove.
- After Climate Panels are installed, attach ½" spacers to the remainder of the stud wall to provide an even base for the concrete or gypsum wallboard.

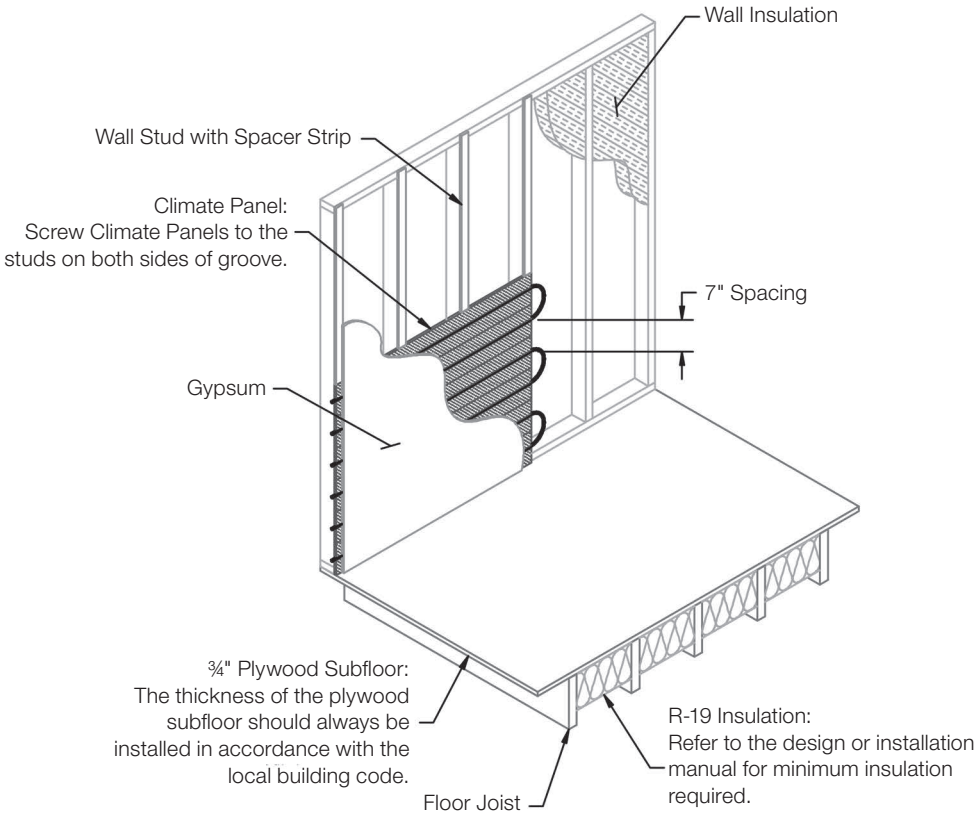

Install Climate Panel six rows high to avoid interference with window and picture placement.

4 Climate Panel Installation

4.1 Layout Planning

To avoid waste and to have equal circuit lengths, a carefully planned layout should be done.

First, determine where the manifold should be installed. Remember, the manifold must be accessible. When calculating number of circuits, always round up. Keep length of each circuit in the same room equal.

	Maximum Circuit Length	
Tubing	**≤ 25 BTUs/(h x ft.²)**	**25-35 BTUs/(h x ft.²)**
5/16" Viega Barrier PEX	250 ft.	200 ft.

Calculating number of circuits: Total amount of tubing ÷ Maximum circuit length = # of circuits
Table 11: Maximum Circuit Length

Manifold is located in basement supplying circuits from below.

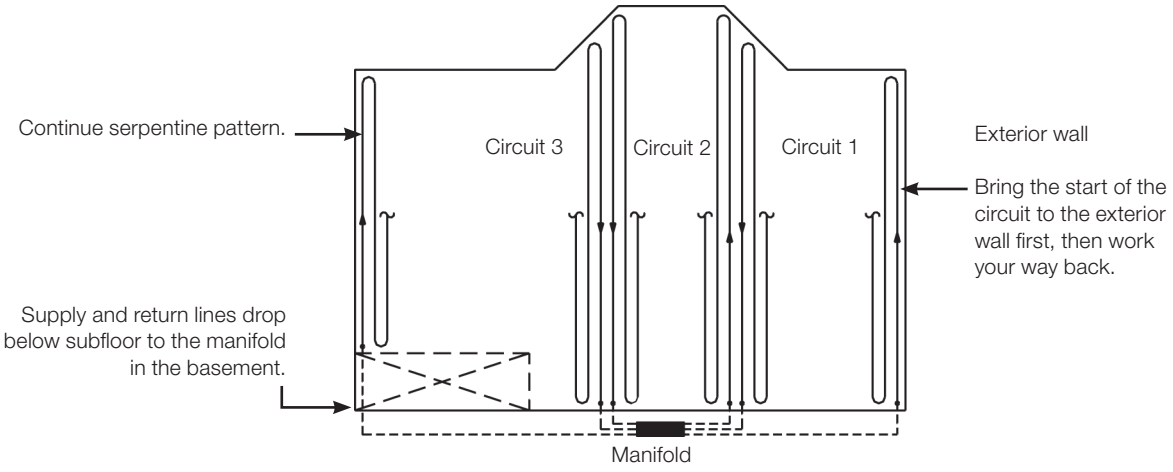

Manifold is located in the wall with a manifold cabinet
(part number 15800, 15801,15802)

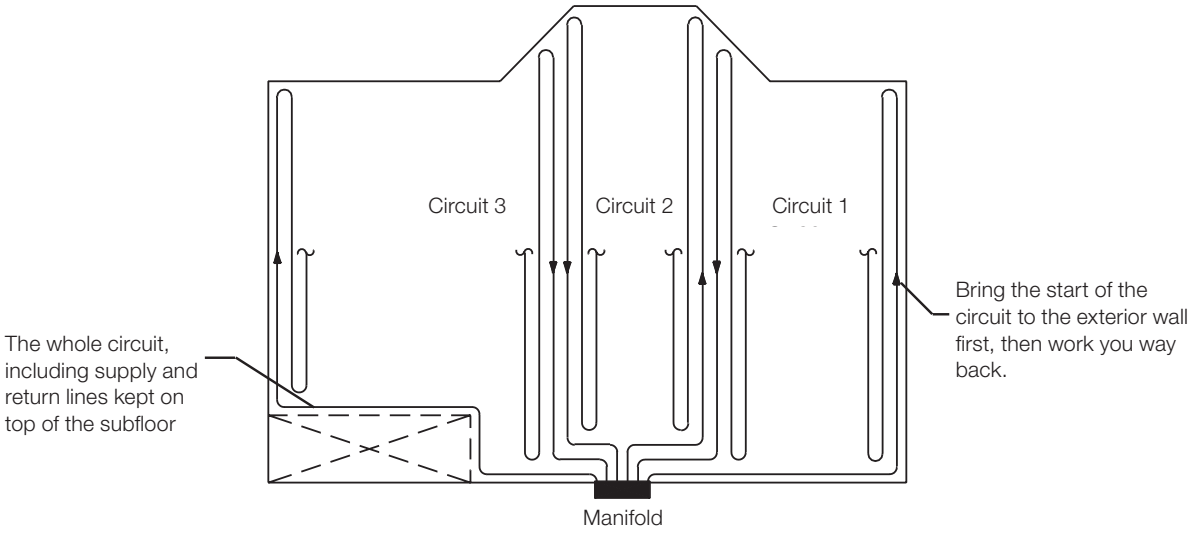

4.2 Panel Installation

4.2.1 Step 1

Decide the proper direction of the Climate Panels.

Tile Finish Floor
If tiles will be installed over the Climate Panels, run the panels perpendicular to the floor joists. This stiffens the floor for a more stable tile installation. Aligning the ends of each panel to lie on a joist is optional, but will allow fasteners to attach panels, subfloor, and joists together.

Carpet or Vinyl Finish Floor
If the finish floor will be carpet, linoleum, or vinyl, the direction of the Climate Panels is not critical. Where possible, running the panels perpendicular to the floor joists will strengthen the floor and reduce deflection.

Hardwood Finish Floor
Where hardwood flooring will be installed over the Climate Panel system, always run the panels perpendicular to the direction of the hardwood planks (regardless of the joist direction). This will keep tubing visible during floor nailing and reduce the possibility of accidental tubing puncture.

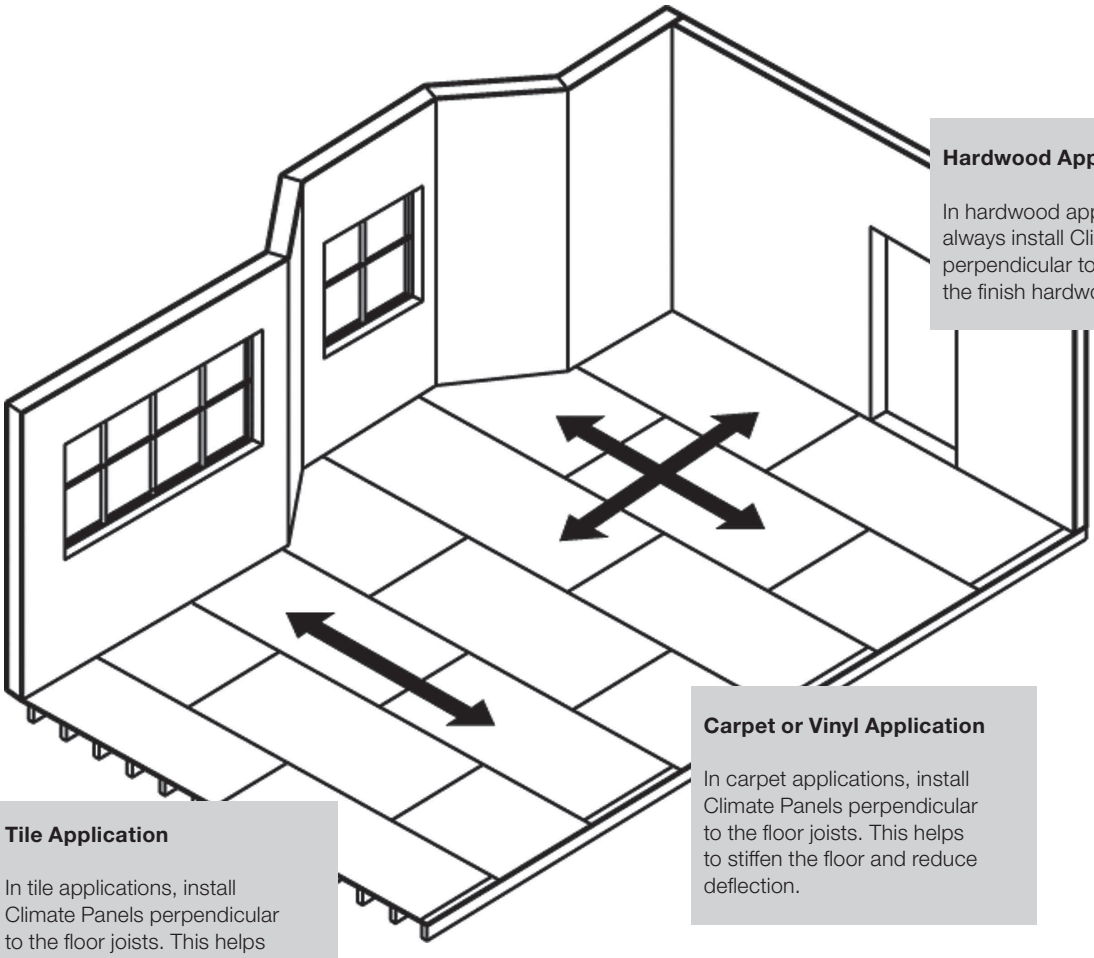

Hardwood Application

In hardwood applications, always install Climate Panels perpendicular to the direction of the finish hardwood floor.

Carpet or Vinyl Application

In carpet applications, install Climate Panels perpendicular to the floor joists. This helps to stiffen the floor and reduce deflection.

Tile Application

In tile applications, install Climate Panels perpendicular to the floor joists. This helps to stiffen the floor and reduce deflection.

4.2.2 Step 2

Because most rooms are not perfectly square, lines need to be chalked to ensure proper layout of the Climate Panels.

Begin by chalking a line along the wall where the first row of panels will be laid out. The line should be 7¼" from the wall.

Next, chalk lines along the walls where the u-turn strips will be laid out. One way to ensure that the chalk lines are perpendicular to each other is to use the right triangle rule – a2+b2=c2 – also known as the 3, 4, 5 triangle.

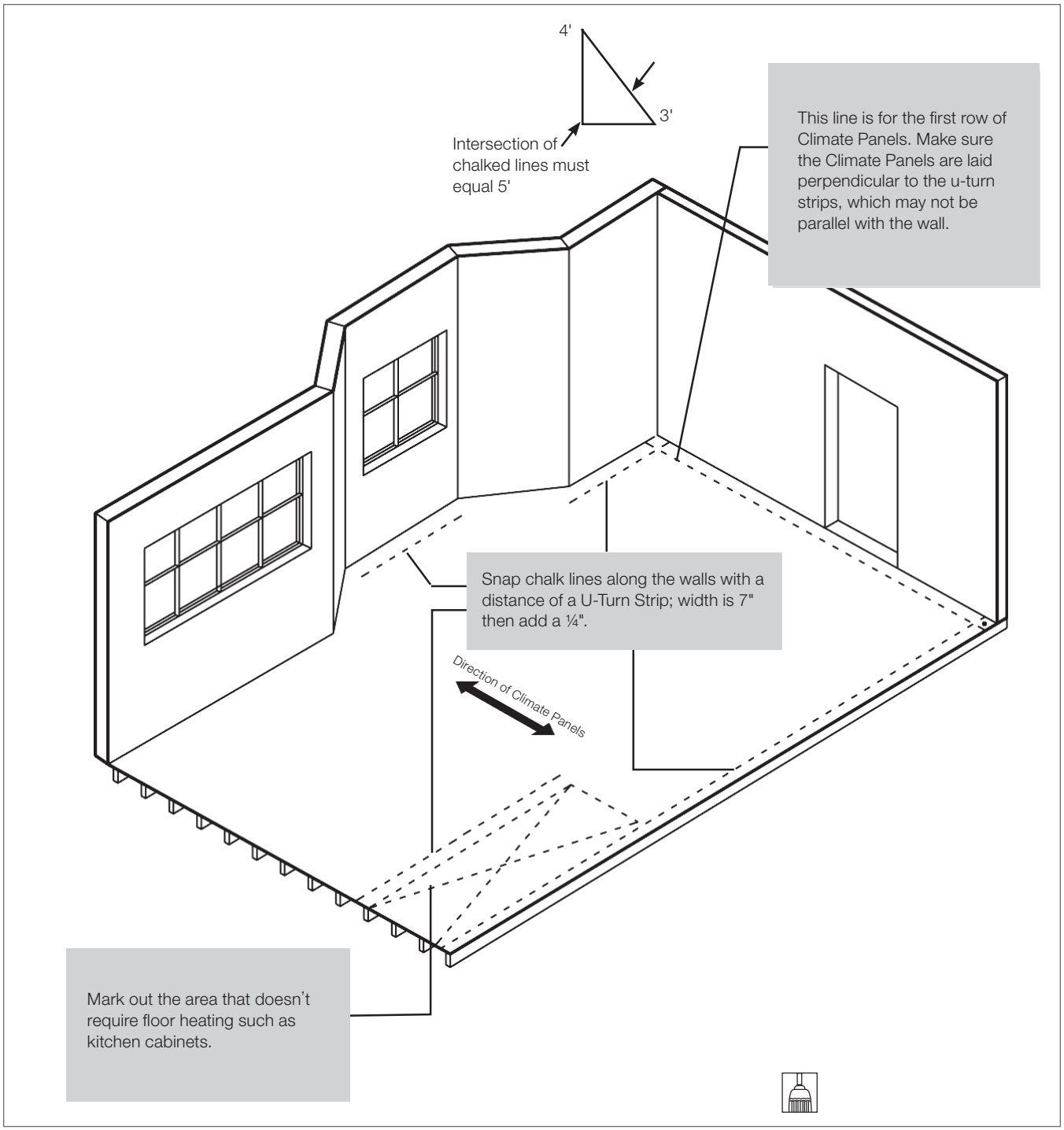

Make sure floor is free of anything that would inhibit the Climate Panels from laying down flat (screws, woodchips, dried plaster, damaged plywood, etc.

4.2.3 Step 3

Start installing the Climate Panels.

Begin laying out panels along chalked line. Use single panels to ensure they are lined up with the line. This row will act as a guide for the ACPs laid down afterwards, allowing for faster installation. Be sure to fasten down row of single panels before you begin to lay out the ACPs.

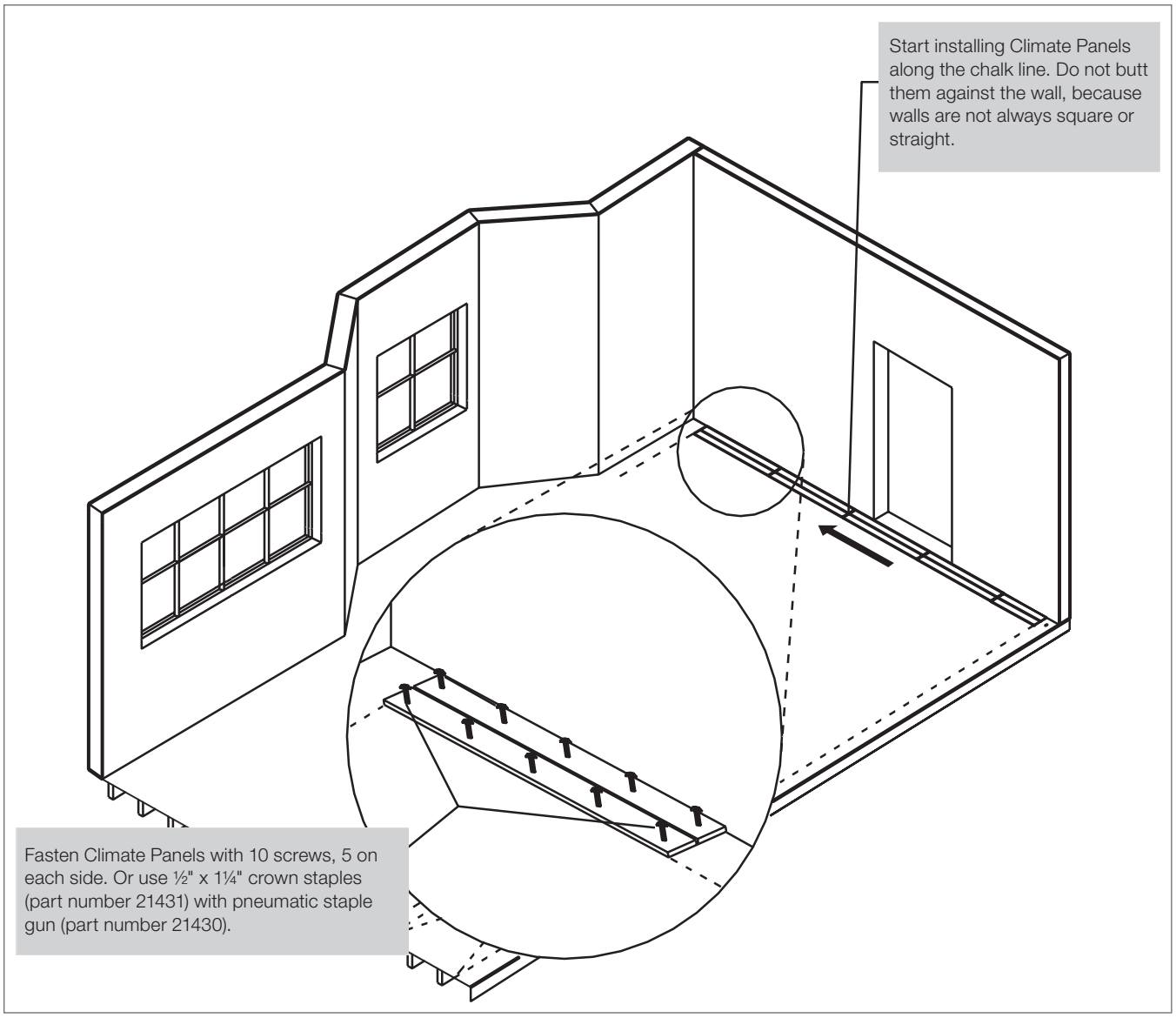

4.2.4 Step 4

Stagger the Climate Panels.

To begin ACP installation, cut an unopened bundle in half to create a straight edge to begin. Be sure the ACP is completely flush with the first row already fastened down before you begin to fasten the ACPs. After the first row of ACPs has been laid out, begin to stagger seams.

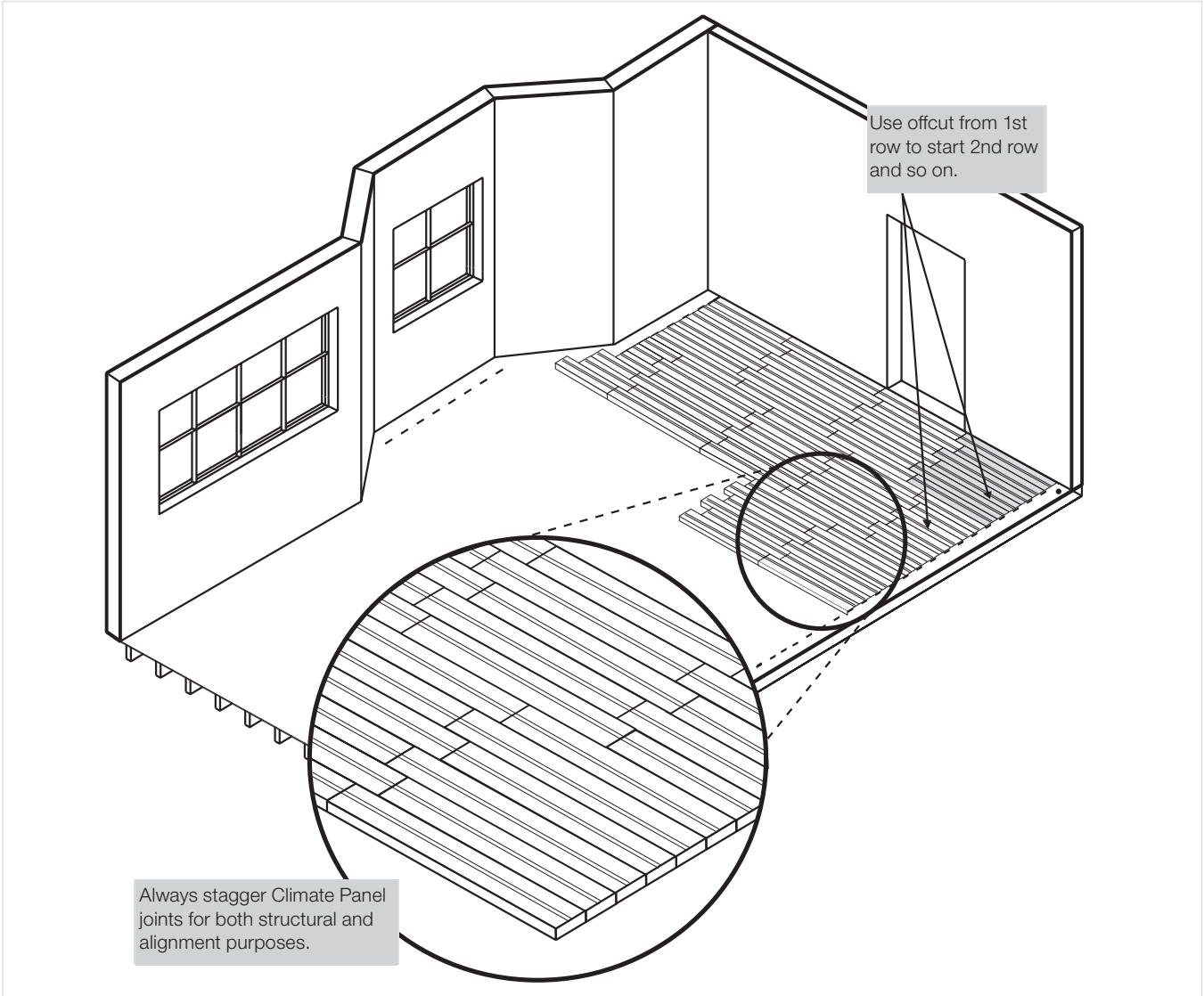

A 12" chop saw is a good tool to use for cutting the Climate Panels and ACPs.

4.2.5 Step 5

Install the Climate Panels, then the u-turn strips.

When laying down u-turn strips, be sure to first put down the aluminum sheets provided in each u-turn bundle. After the aluminum is laid out, align u-turn strips up with the correct tracks and fasten.

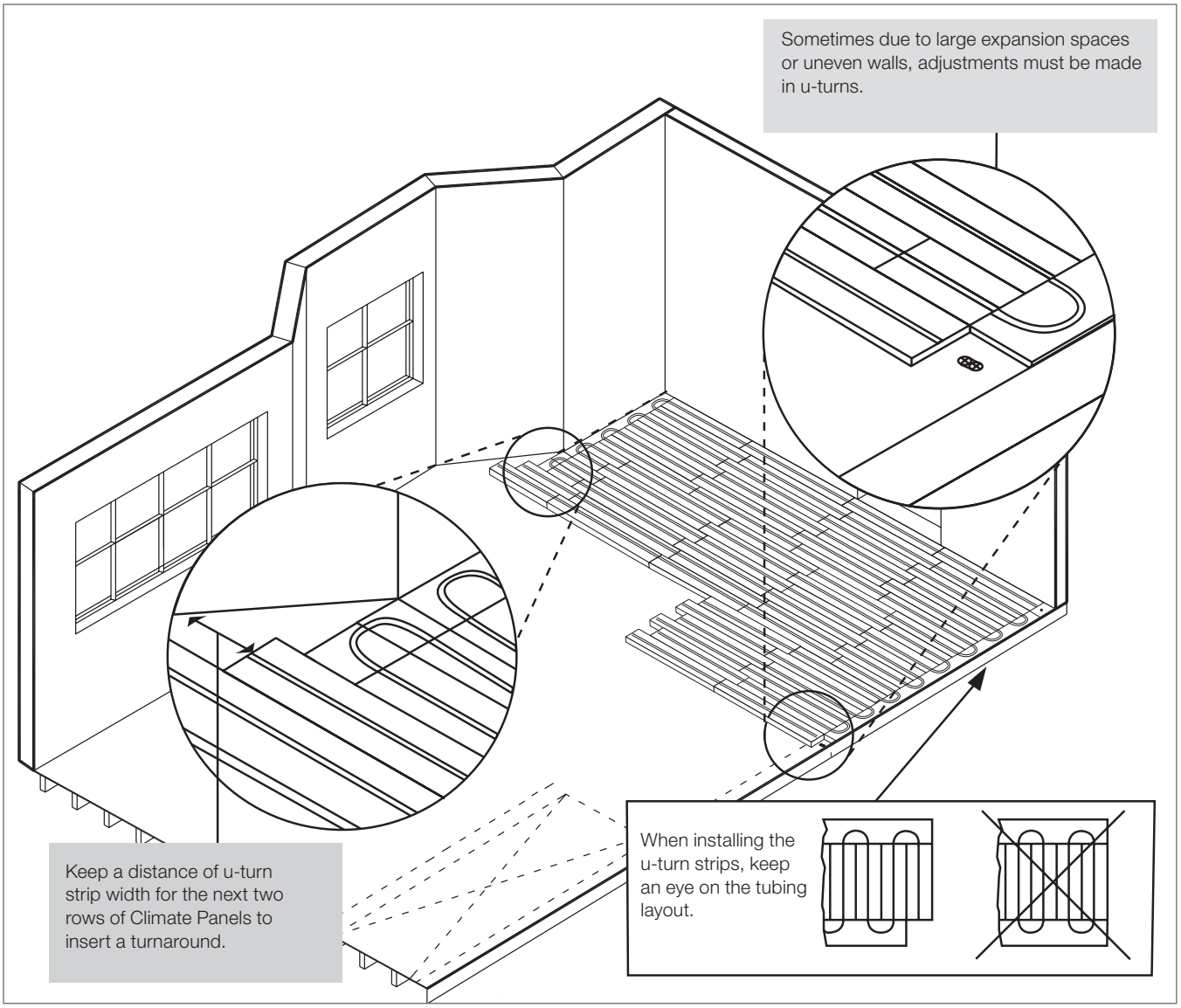

A utility knife is a good tool to use for trimming the aluminum sheets needed under u-turns (score, bend, break).

4.2.6 Step 6

Install the Climate Panels, then the u-turns.

Cut turnaround pieces in area shown at the same angle as the wall to maximize heated area while minimizing the area that needs to be filled in, especially along the exterior walls.

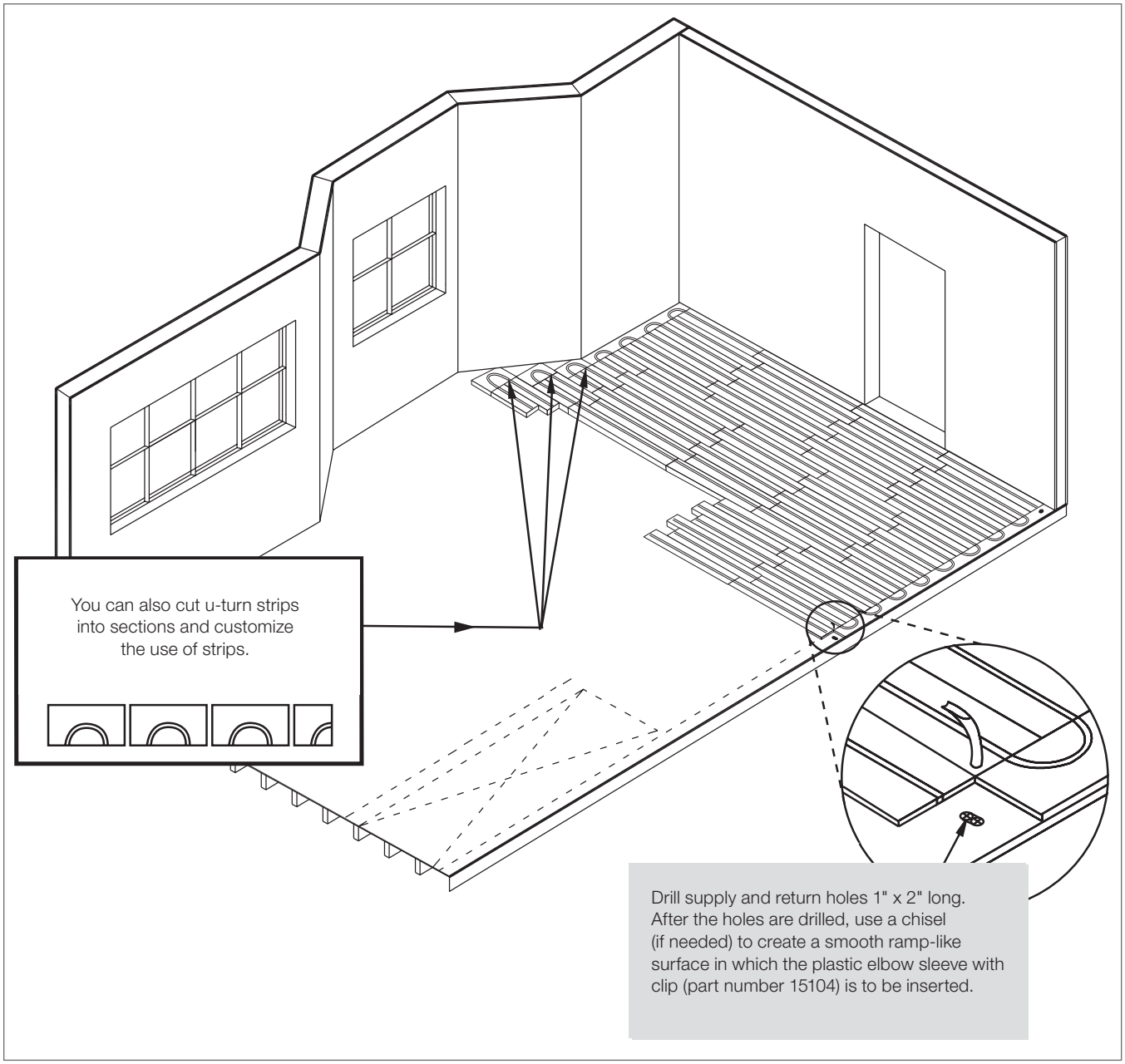

4.2.7 Step 7

Install the Climate Panels one circuit at a time.

To minimize the chance of damaging the tubing while installing, use a utility knife to nip any corners at u-turns that did not line up perfectly.

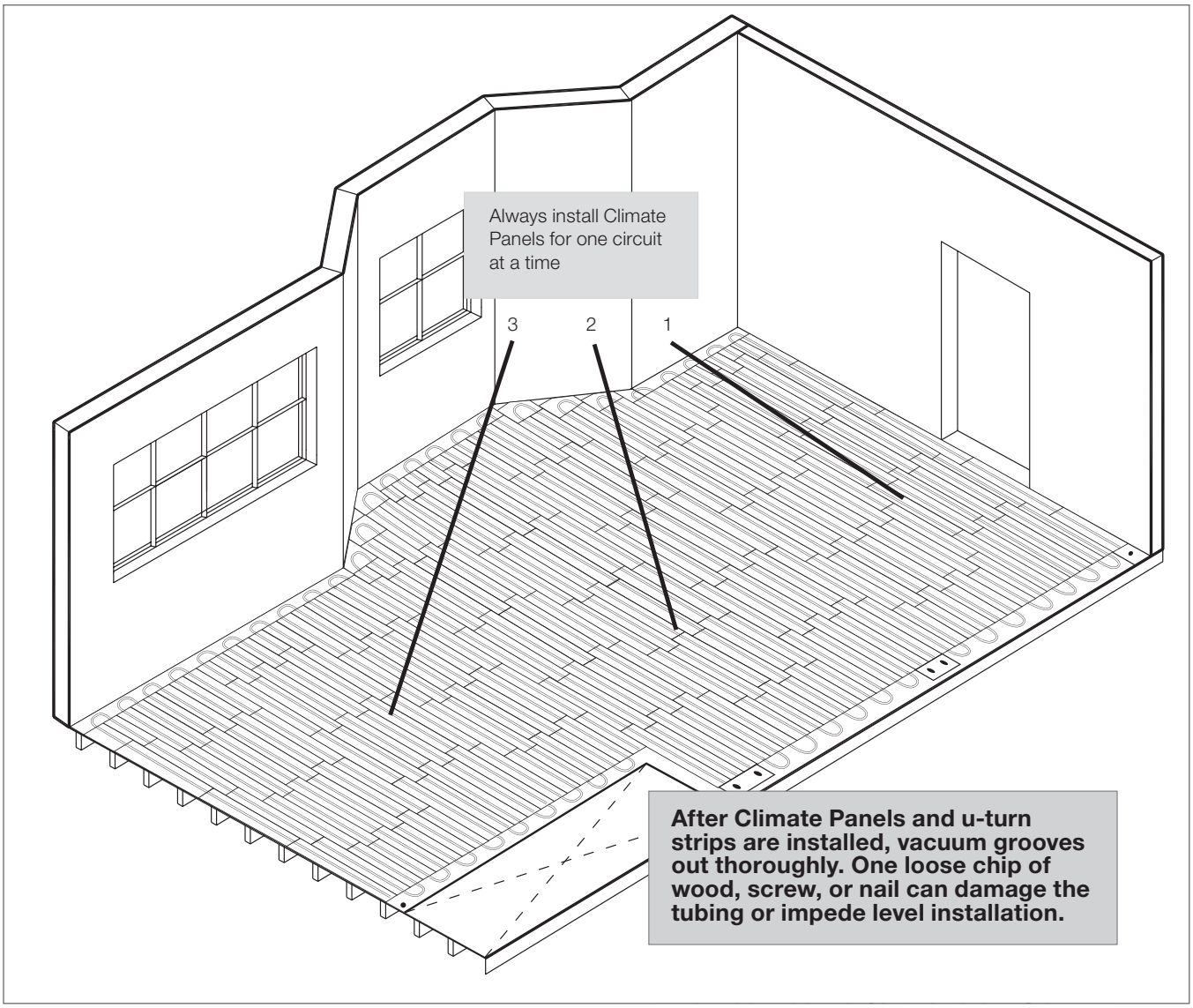

4.3 Assembled Climate Panel Installation

The Assembled Climate Panel (ACP) system serves two important functions:

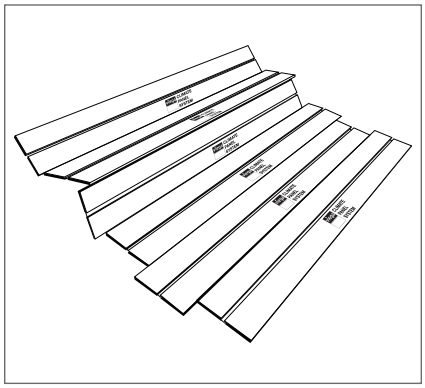

1. The ACP units are a time and labor saving device. The hinged units of six panels can be spread out and interlocked quickly, dramatically decreasing installation time when installed over a plywood subfloor.

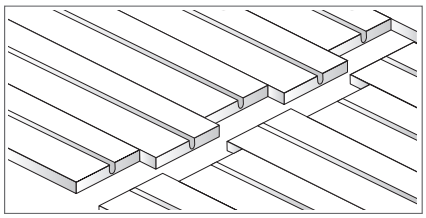

2. The ACP system can be installed over existing concrete slabs as a floating floor system (refer to "3.10 Typical Cross Sections" on page 21).

When floating the panels, tape joints in between ACPs.

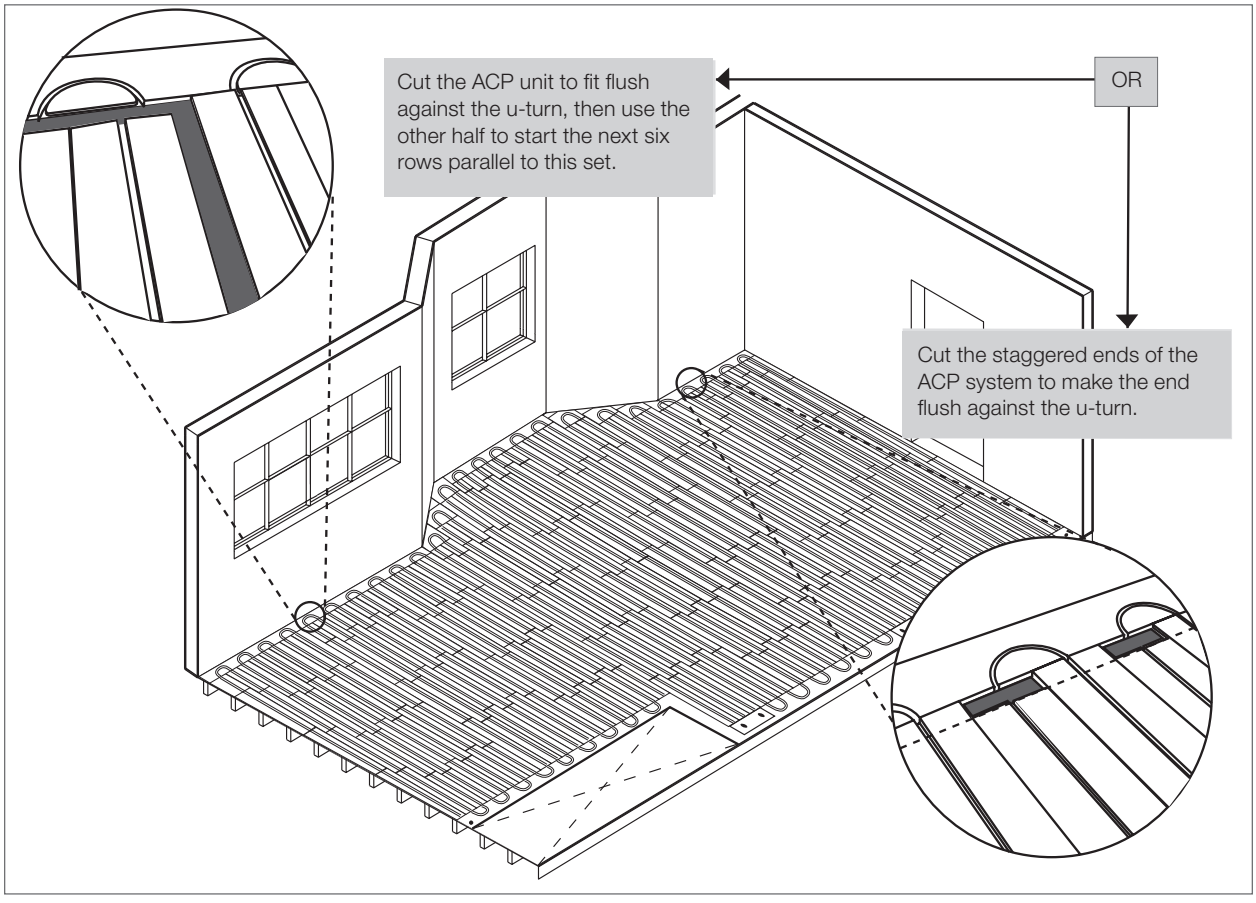

4.3.1 Climate Panel Accessories

Climate Panel accessories consist of multi-run panels, multi-run access pieces and multi-run nineties. These accessories are used to transition 5/16" VieagPEX Barrier tubing back to the manifold on top of the sub floor.

Part Number	Product Description	Package Quantity
14050	Multi-Run Climate Panel	5
14055	Multi-Run Access Piece	6
14060	Multi-Run Ninety	5

Table 12: Climate Panel Accessories

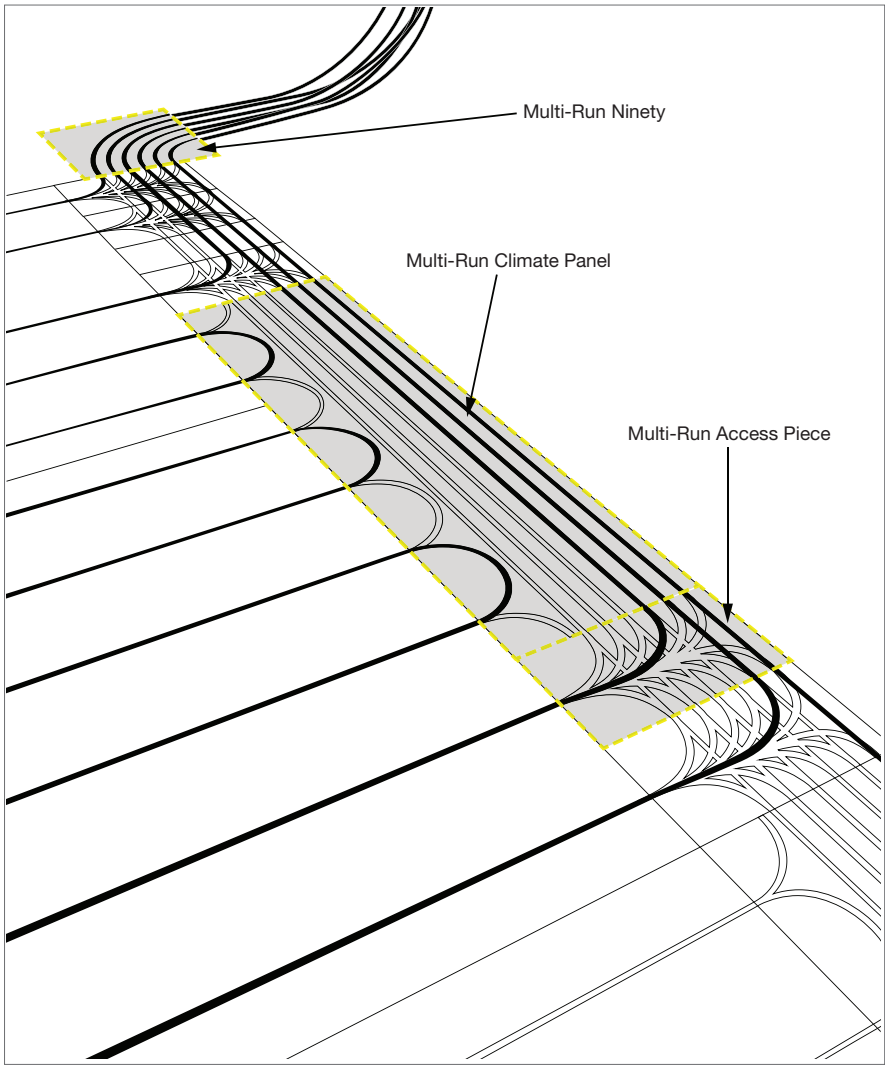

4.4 Tubing Installation

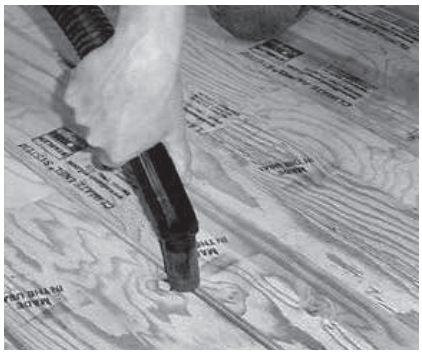

After Climate Panels and u-turn strips are installed, vacuum groove out thoroughly just prior to installing tubing. If trapped in the groove, any debris, screws, nails, etc. will damage the tubing and keep it from lying flush with the top surface. When penetrating the floor, use a plastic elbow sleeve.

1. Figure the leader length of the supply line to the manifold area.

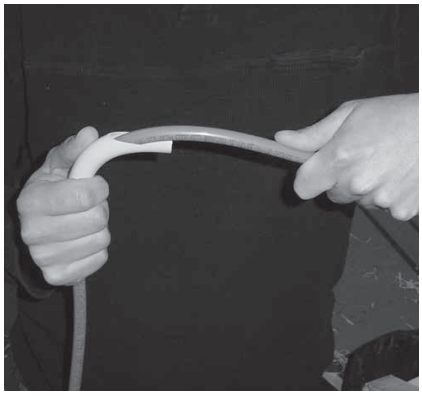

2. Feed leader length through plastic elbow sleeve (be careful not to scratch the tubing in the process).

Feed the tubing through an unsecured plastic elbow sleeve.

3. Feed the leader length through the floor.
4. Secure the fastener clip to the floor.

Directly before installing tubing into the Climate Panels, run a ¼" bead of Viega's Groove Tube into the panel grooves.

- Guaranteed not to damage PEX tubing or aluminum, Groove Tube is strongly recommended.
- Do not use caulking or any other type of sealant or adhesive.

Installers: Groove Tube becomes tacky in 8 to 10 minutes. It is recommended that Groove tube is applied only to a section that can be covered in this amount of time.

Directly after the Groove Tube installation (before it cures), walk tubing off a decoiler into the Climate Panel groove.

It is imperative to make sure tubing is completely in its tracks before silicone hardens. Tubing may have to be hammered in using a rubber mallet or a pneumatic soft-tipped palm hammer.

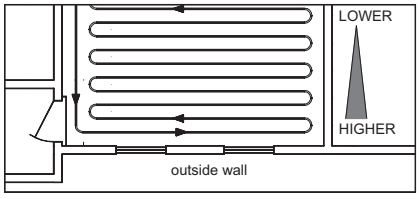

Run supply tubing from manifold supply valves into high heat loss areas first (i.e., closest to exterior walls, windows, sliders, etc.), and then into the interior of the room.

This will provide more BTU output where it is needed due to higher water temperatures. Continue the circuits, laying them out in the same direction toward the interior of the room.

5 Piping and Controls

5.1 Mixing Equipment and Manifolds

Hydronic mixing block includes:
- Connection fittings
- Mixing device with reset control
- 3-speed circulator (low head)
- Air vent
- Pressure temperature sensor
- Mounting bracket
- Outdoor sensor

Enhanced mixing station includes:
- Ball valves
- Circulator pump (low head)
- Diverting valve with temperature high limit
- Mounting brackets
- ECM motor technology, reduces power consumption by up to 50%
- 7 different settings
- 3 boiler connection types

Base mixing station includes:
- Ball valves
- 3-speed circulator pump (high head)
- Diverting valve with temperature high limit
- Mounting brackets
- 3 boiler connection types

1¼" Stainless manifold includes:
- 2 stainless manifold configurations
- Shut-off/balancing/flow meter
- Shut-off/balancing
- 2 - 6⅝" spacing brackets (for compact remote mounting)
- 2 to 12 outlets per manifold
- 2 to 12 flow meters / balancing valves on supply header for flow adjustment from 0-2 GPM
- 2 to 12 shut-off valves on return manifold designed to receive powerheads (part number 15061 and 15070 for 2 wire powerhead and part number 15064 and 15069 for 4 wire powerhead)
- Built-in purge valves and air bleeders
- 1¼" NPT union connections
- 1" NPT removable end caps

5.2 Single Temperature Radiant System

To modulate system fluid temperature as the outdoor temperature changes (outdoor reset) Viega has a couple of options:

- The hydronic mixing block may be selected to incorporate mixing, control and outdoor reset in one easy to install package.
- The basic heating control may be used in conjunction with a mixing station to modulate system fluid temperature based on outdoor temperature.

Single or multiple zones can be used by adding thermostats, zone controls, zone valves, and/or powerheads as necessary.

Part Number	Material	Quantity
12121 - 12123 - 12125	Mixing Station	1
12151 - 12152 - 12153	Enhanced Mixing Station	1
56160	Hydronic Mixing Block	1
16015	Basic Heating Control	1
16016	Indoor Sensor	1
18003	Three Position Actuator for Station	1
15900-15910 15700-15710	1¼" Stainless Manifold, # Outlets*	1

**Based on job requirements*

Table 13: Single Temperature Radiant System Materials

Primary Loop Sizing		
Copper Pipe Size (in)	Flow Rate (GPM)	Heat Carrying Capacity (BTU/h)
¾	4	40,000
1	8	80,000
1¼	14	140,000
1½	22	220,000
2	45	450,000

Table 14: Primary Loop Sizing

5.2.1 Single Temperature: Hydronic Mixing Block

5.2.1.1 Mechanical Schematic

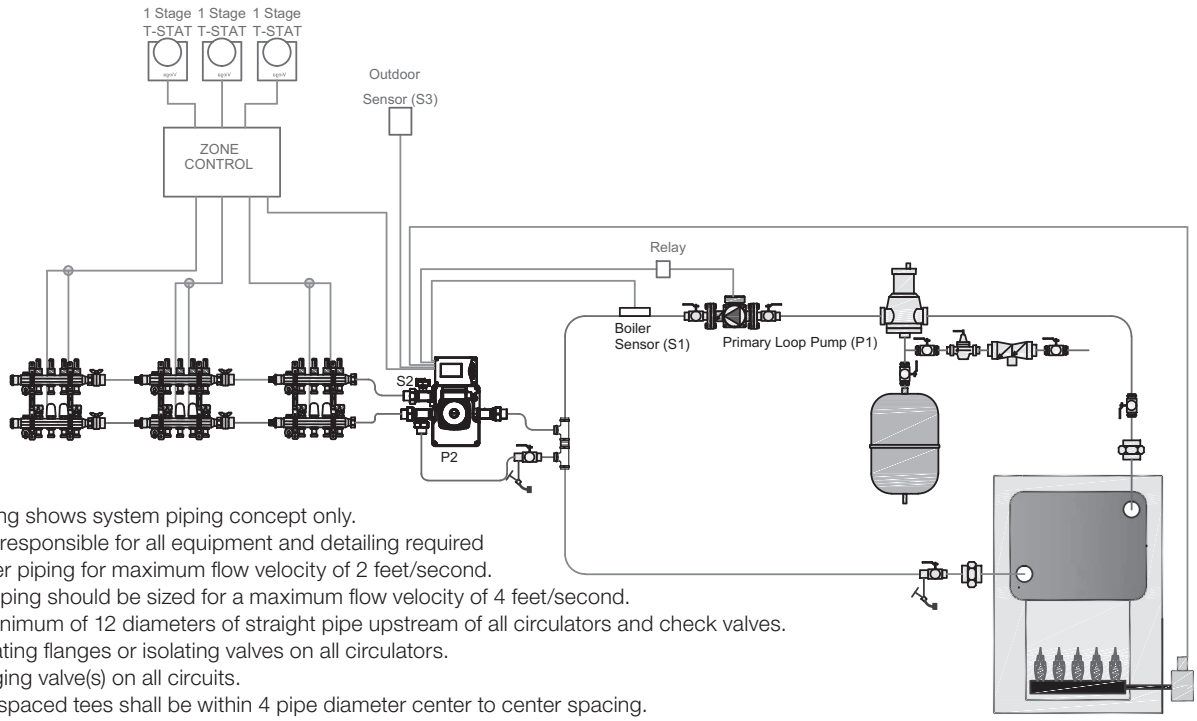

Piping

1. This drawing shows system piping concept only.
   Installer is responsible for all equipment and detailing required
2. Size header piping for maximum flow velocity of 2 feet/second.
3. All other piping should be sized for a maximum flow velocity of 4 feet/second.
4. Install a minimum of 12 diameters of straight pipe upstream of all circulators and check valves.
5. Install isolating flanges or isolating valves on all circulators.
6. Install purging valve(s) on all circuits.
7. All closely spaced tees shall be within 4 pipe diameter center to center spacing.
8. Install minimum of 6 pipe diameters of straight pipe upstream and downstream of all closely spaced tees.
9. Differential pressure bypass valve prevents flow noise under partial load conditions (some zone valves closed).
10. Set differential pressure bypass valve to delta P of distribution system with all zones open + 1 psi.
11. Not all components may be required depending on control strategy (i.e., constant circulation).

5.2.1.2 Electrical Schematic

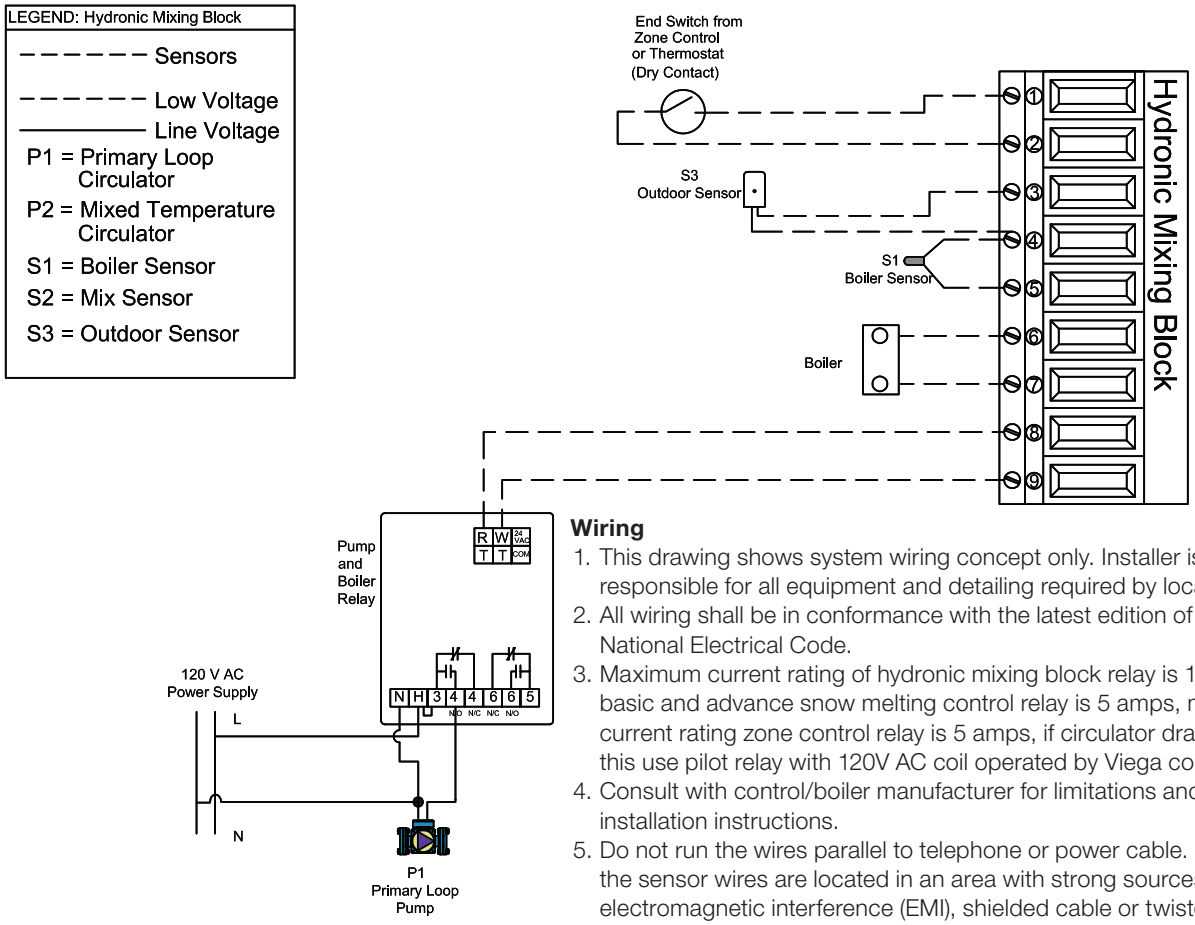

Wiring

1. This drawing shows system wiring concept only. Installer is responsible for all equipment and detailing required by local codes.
2. All wiring shall be in conformance with the latest edition of the National Electrical Code.
3. Maximum current rating of hydronic mixing block relay is 1 amps, basic and advance snow melting control relay is 5 amps, maximum current rating zone control relay is 5 amps, if circulator draw exceeds this use pilot relay with 120V AC coil operated by Viega control.
4. Consult with control/boiler manufacturer for limitations and installation instructions.
5. Do not run the wires parallel to telephone or power cable. If the sensor wires are located in an area with strong sources of electromagnetic interference (EMI), shielded cable or twisted pair should be used or the wires can be run in a grounded metal conduit. If using shielded cable, the shield wire should be connected to the com terminal on the control and not to earth ground. Use 18 AWG copper wiring for all sensor wiring.
6. DHW priority relay must be rated to handle full amperage load of zone circulator relay center.
7. Other configurations are possible, but all space heating zone circulators must turn off when DHW mode is on or heat source needs to be sized for multiple loads.

5.2.2 Single Temperature: Basic Heating Control

5.2.2.1 Mechanical Schematic

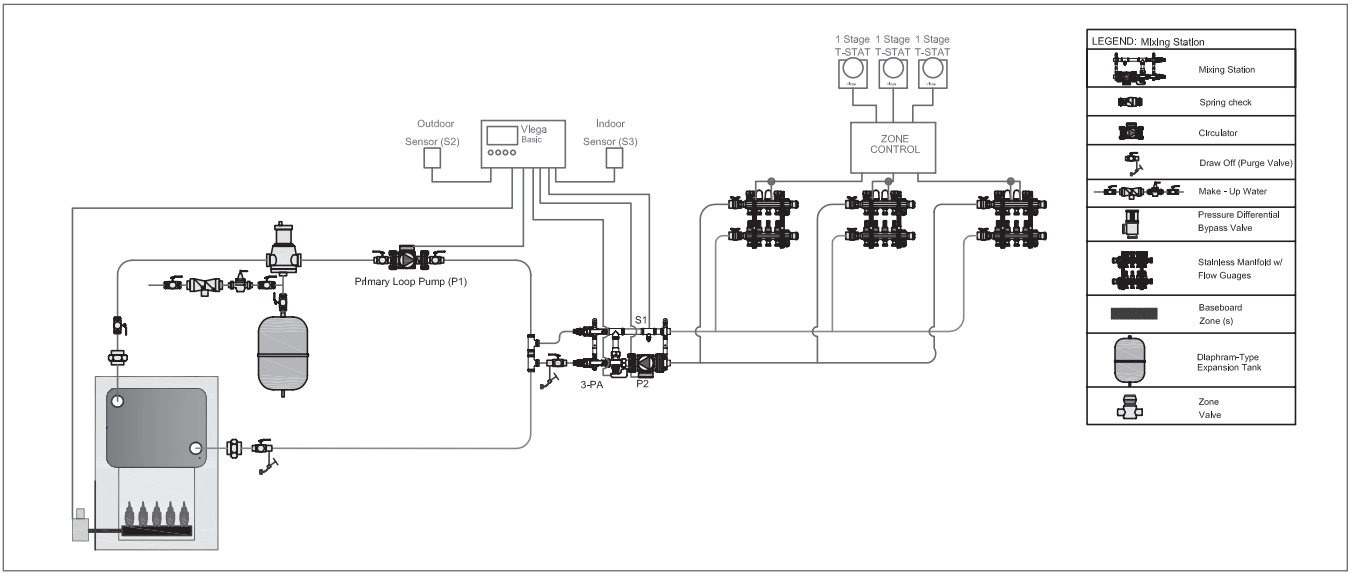

5.2.2.2 Electrical Schematic

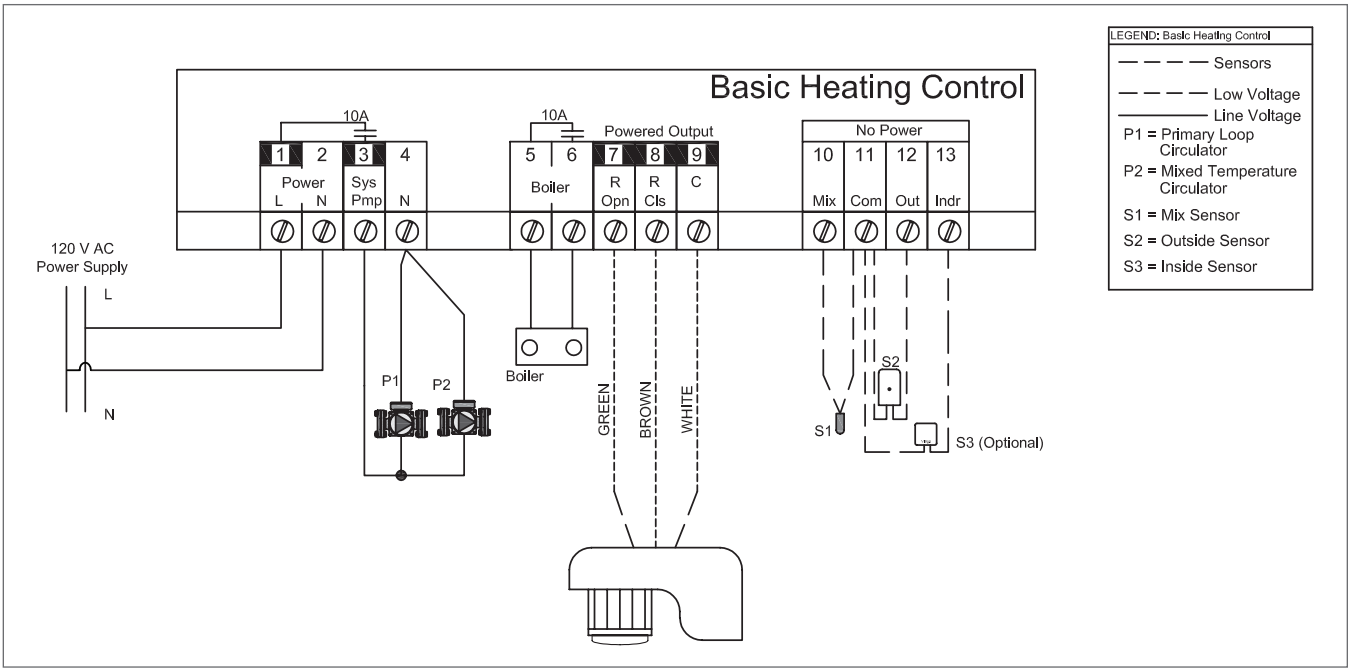

5.3 Multiple Temperature Radiant System

If the heat loss and required water temperature varies throughout a building, a multiple water temperature system may be required. To add an additional temperature system, pipe in another hydronic mixing block or mixing station with the necessary controls.

Part Number	Material	Quantity
12121 - 12123 - 12125	Mixing Station	2
12151 - 12152 - 12153	Enhanced Mixing Station	2
56160	Hydronic Mixing Block	2
16015	Basic Heating Control	2
16016	Indoor Sensor	2
18003	Three Position Actuator for Station	2
15900-15910 15700-15710	1¼" Stainless Manifold, # Outlets*	2
18060 - 18062	Zone Control	2
18050 - 15116 - 15117 - 15118	Thermostats	*
15061 - 15064 - 15069 - 15070	Powerheads	*

**Based on job requirements*

Table 15: Multiple Temperature Radiant System Materials

5.3.1 Multiple Temperature: Hydronic Mixing Block

5.3.1.1 Mechanical Schematic

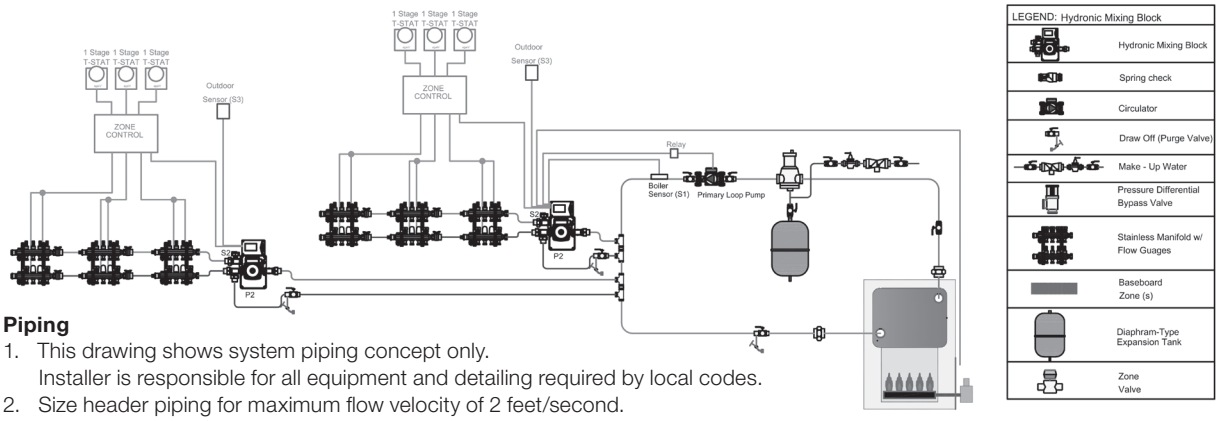

Piping

1. This drawing shows system piping concept only.
   Installer is responsible for all equipment and detailing required by local codes.
2. Size header piping for maximum flow velocity of 2 feet/second.
3. All other piping should be sized for a maximum flow velocity of 4 feet/second.
4. Install a minimum of 12 diameters of straight pipe upstream of all circulators and check valves.
5. Install isolating flanges or isolating valves on all circulators.
6. Install purging valve(s) on all circuits.
7. All closely spaced tees shall be within 4 pipe diameter center to center spacing.
8. Install minimum of 6 pipe diameters of straight pipe upstream and downstream of all closely spaced tees.
9. Differential pressure bypass valve prevents flow noise under partial load conditions (some zone valves closed).
10. Set differential pressure bypass valve to delta P of distribution system with all zones open + 1 psi.
11. Not all components may be required depending on control strategy (i.e. constant circulation).

5.3.1.2 Electrical Schematic

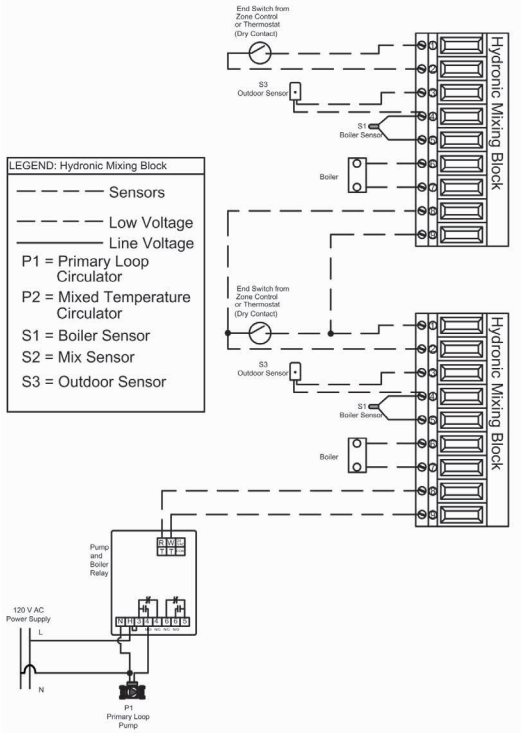

Wiring

1. This drawing shows system wiring concept only. Installer is responsible for all equipment and detailing required by local codes.
2. All wiring shall be in conformance with the latest edition of the National Electrical Code.
3. Maximum current rating of hydronic mixing block relay is 1 amps, basic and advance snow melting control relay is 5 amps, maximum current rating zone control relay is 5 amps, if circulator draw exceeds this use pilot relay with 120V AC coil operated by Viega control.
4. Consult with control/boiler manufacturer for limitations and installation instructions.
5. Do not run the wires parallel to telephone or power cable. If the sensor wires are located in an area with strong sources of electromagnetic interference (EMI), shielded cable or twisted pair should be used or the wires can be run in a grounded metal conduit. If using shielded cable, the shield wire should be connected to the com terminal on the control and not to earth ground. Use 18 AWG copper wiring for all sensor wiring.
6. DHW priority relay must be rated to handle full amperage load of zone circulator relay center.
7. Other configurations are possible, but all space heating zone circulators must turn off when DHW mode is on or heat source needs to be sized for multiple loads.

5.3.2 Multiple Temperature: Basic Heating Control

5.3.2.1 Mechanical Schematic

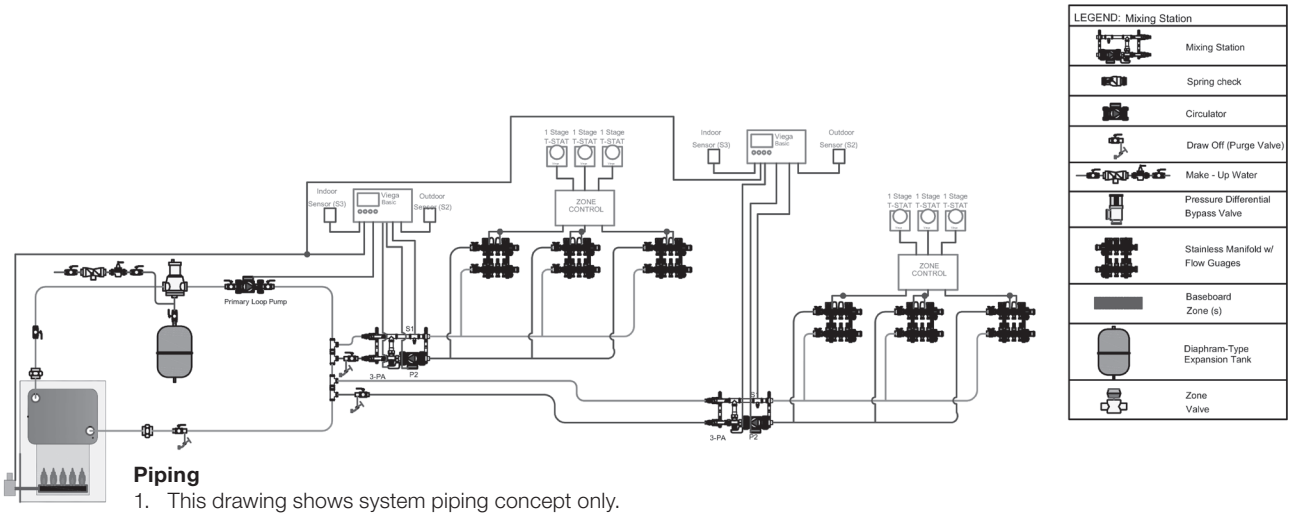

Piping

1. This drawing shows system piping concept only.
   Installer is responsible for all equipment and detailing required by local codes.
2. Size header piping for maximum flow velocity of 2 feet/second.
3. All other piping should be sized for a maximum flow velocity of 4 feet/second.
4. Install a minimum of 12 diameters of straight pipe upstream of all circulators and check valves.
5. Install isolating flanges or isolating valves on all circulators.
6. Install purging valve(s) on all circuits.
7. All closely spaced tees shall be within 4 pipe diameter center to center spacing.
8. Install minimum of 6 pipe diameters of straight pipe upstream and downstream of all closely spaced tees.
9. Differential pressure bypass valve prevents flow noise under partial load conditions (some zone valves closed).
10. Set differential pressure bypass valve to delta P of distribution system with all zones open + 1 psi.
11. Not all components may be required depending on control strategy (i.e. constant circulation).

5.3.2.2 Electrical Schematic

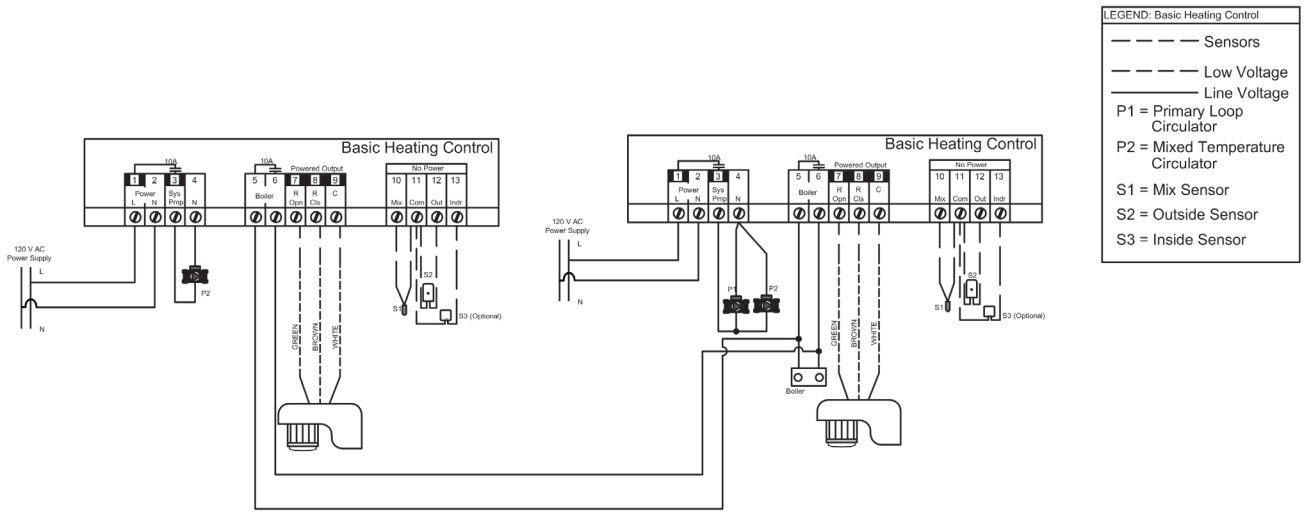

Wiring

1. This drawing shows system wiring concept only. Installer is responsible for all equipment and detailing required by local codes.
2. All wiring shall be in conformance with the latest edition of the National Electrical Code.
3. Maximum current rating of hydronic mixing block relay is 1 amps, basic and advance snow melting control relay is 5 amps, maximum current rating zone control relay is 5 amps, if circulator draw exceeds this use pilot relay with 120 VAC coil operated by Viega control.
4. Consult with control/boiler manufacturer for limitations and installation instructions.
5. Do not run the wires parallel to telephone or power cable. If the sensor wires are located in an area with strong sources of electromagnetic interference (EMI), shielded cable or twisted pair should be used or the wires can be run in a grounded metal conduit. If using shielded cable, the shield wire should be connected to the com terminal on the control and not to earth ground. Use 18 AWG copper wiring for all sensor wiring.
6. DHW priority relay must be rated to handle full amperage load of zone circulator relay center.
7. Other configurations are possible, but all space heating zone circulators must turn off when DHW mode is on or heat source needs to be sized for multiple loads.

5.4 Zone wiring

A manifold system allows any one or more of the circuits to be adapted for control by a thermostat. The following are typical zone wiring schematics.

Detailed wiring diagrams are provided with products.

Installation by a licensed electrician is recommended. Installation and use of this equipment should be in accordance with provisions of the U.S. National Electric Code, applicable local code and pertinent industry standards

5.5 Wiring Schematic: One-Zone Application

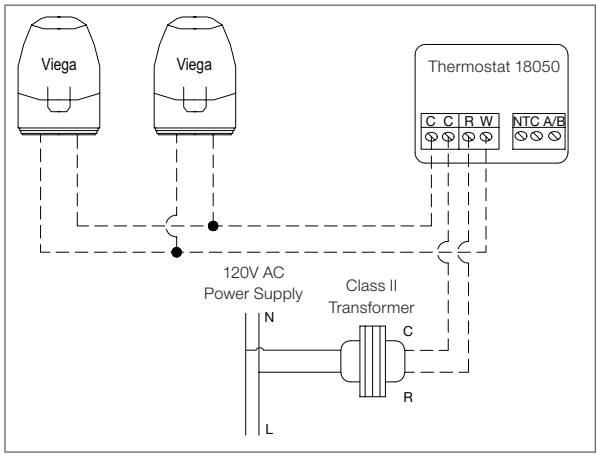

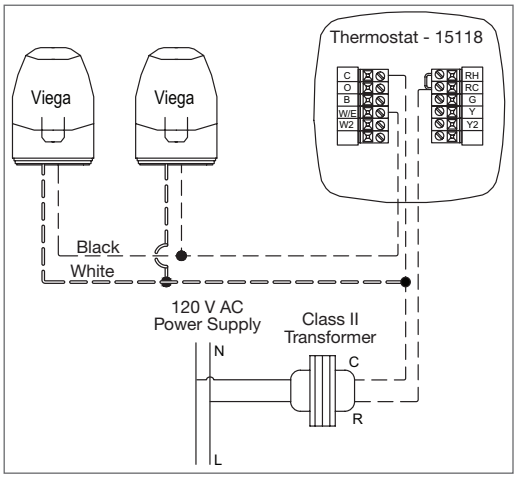

Digital Thermostats can control up to 4 powerheads.

5.6 Wiring Schematic: Multi-Zone Application using Viega Powerheads

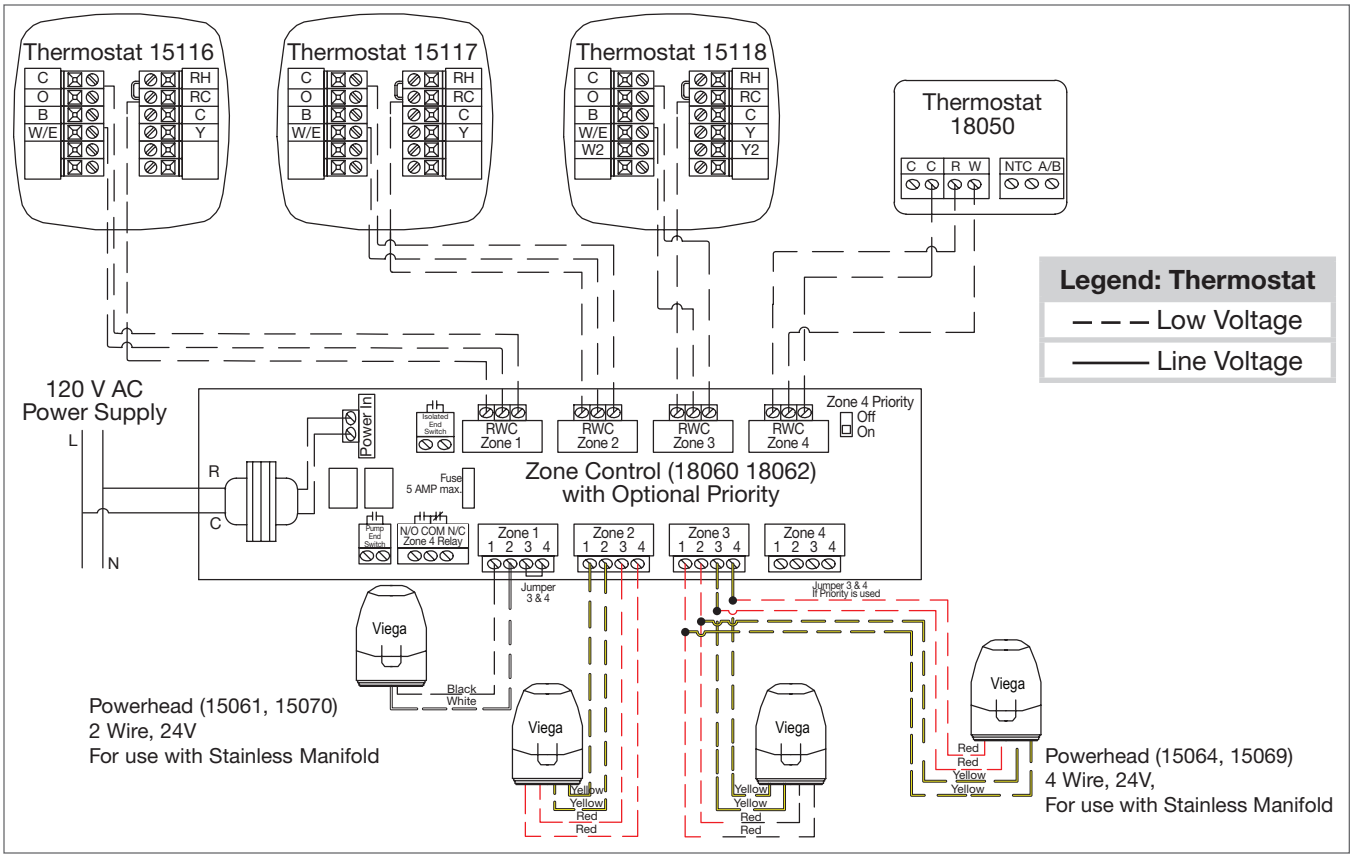

5.7 Wiring Schematic: Multi-Zone Application using Viega Zone Valves

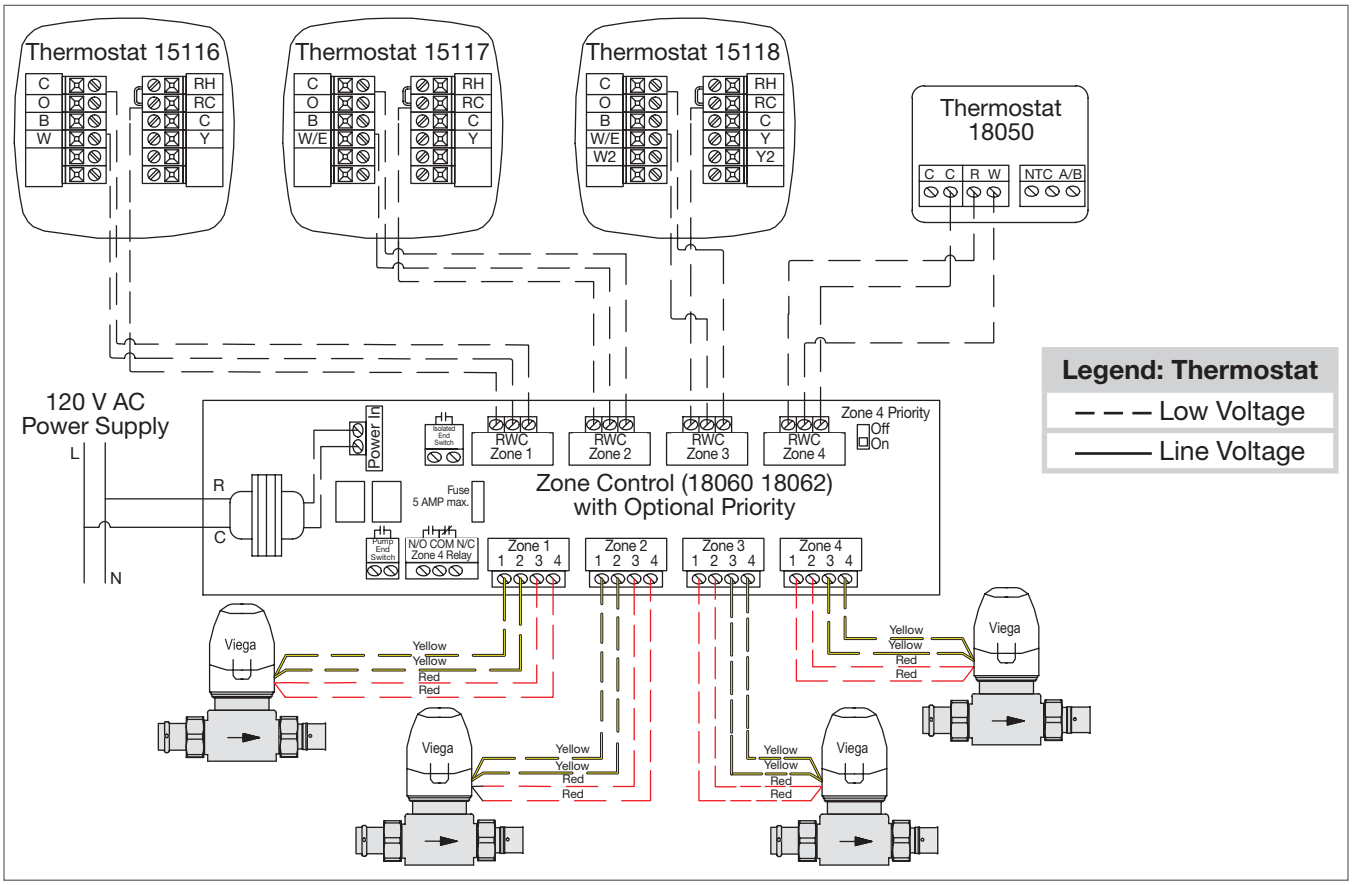

6 System Start-Up

6.1 System Start-Up for Hydronic Mixing Block

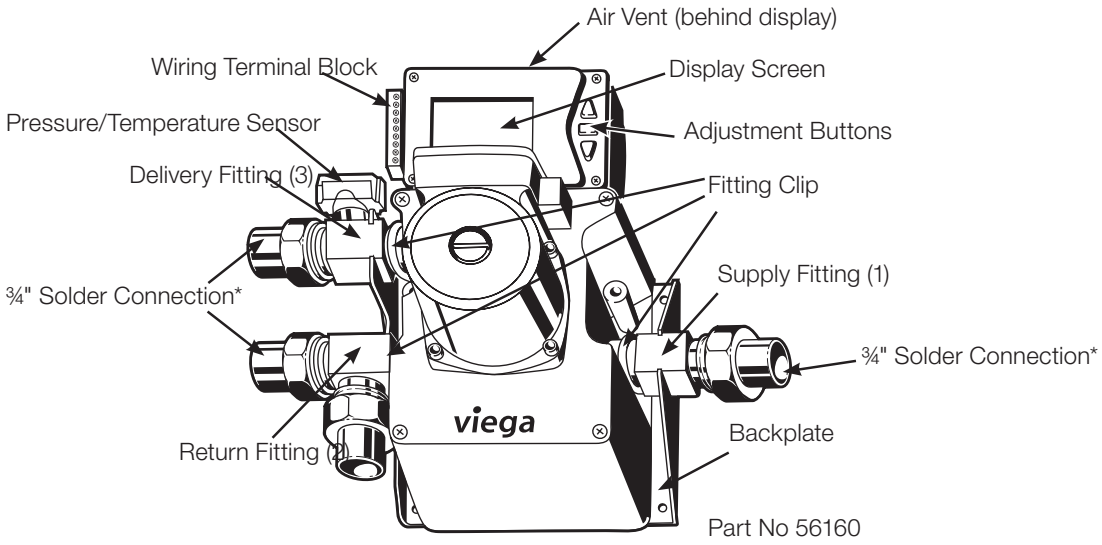

6.1.1 Pressure Testing

When piping is complete, test the hydronic mixing block.

1. Ensure air vent cap is tight before testing.
2. Pressurize the system to a maximum of 100 psi for one hour.
3. Once the system maintains 100 psi for one hour, carefully remove air pressure from the system and fill with fluid.
4. Inspect all piping and fitting joints for leaks.

6.1.2 Filling and Purging

When testing is complete, purge the hydronic mixing block.

1. Shut the power off to the boiler.
2. Purge with only cool water, if the boiler is hot it should be cooled down prior to purging, this is done to protect the floor coverings from surface temperatures above 85° F.
3. Plug in the Hydronic Mixing Block, allow it to run through its initial setup and bring you to the STATUS screen.
4. From the STATUS screen push the middle rectangular button.

DEFAULTS/PURGE

1. Select PURGE
2. Select ACTIVATE
   - Selecting ACTIVATE will cause the screen to turn purple, at which time the internal valve will open, once the valve is open the screen will blink purple and start a 30 minute timer to allow for purging.
   - If more time is needed, ACTIVATE may be selected as many times necessary to complete system purging.
   - If less time is needed purge can be cancelled by selecting CANCEL.
3. Allow the Hydronic Mixing Block to be filled with fluid from the supply side piping.
4. Close the valve on the return piping to the boiler.
5. Open the purge valve to allow trapped air to be eliminated.
6. Continue to allow fluid to run into the block and out the purge valve until all air is removed from the system.
7. Once purging is complete, return all valves to normal operating position.
8. Open the air vent cap to allow air to escape under normal operation.
9. Once the Hydronic Mixing Block, boiler and piping has been purged and properly pressurized, restart the boiler.

6.2 System Start Up for Mixing Stations

6.2.1 Pressure Testing

Before the finish floor is installed the radiant system must be pressure tested. Air or water may be used as the medium. The following procedure is recommended by Viega. Check the local building code for compliance or additional test requirements.

1. Double check all connections to manifold to ensure proper seal.
2. Connect manifold pressurization kit (1) to any purge valve (2).
3. Pressurize the system to 100 psi to detect potential nail or screw penetrations.
4. The system should hold the 100 psi for a minimum of 1 hour.

6.2.2 Filling and Purging

1. Attach drain hose to purge valve hose connection on return header and open valve.
2. Close all but one circuit. Close isolation ball valve on boiler return line. Remove plastic dust cap or temperature controller from 3-way valve, and make sure that high limit kit is fully open.
3. Open boiler fast fill valve to purge circuit. After purging first circuit, close red balancing valve and open next one. Continue with one circuit at a time until all circuits have been purged.
4. Close purge valve and open all balancing and boiler valves. Reset high-limit kit, and reinstall temperature controller or actuator onto 3-way valve.
5. Any remaining air pockets in the system will be eliminated through the automatic air vent after a few hours of constant circulation.

If the system must be purged again in the future for any reason, the high limit kit must be re-opened during purging for full flow.

6.3 Adjusting the High-Limit Kit (Mixing Station)

6.3.1 Operation

The mixing station is provided with a pre-installed temperature high-limit kit. This kit is installed into the three-way valve to allow a maximum supply water temperature to be set. This kit must be unscrewed when purging the system and should then be set according to the instructions on the next page.

1

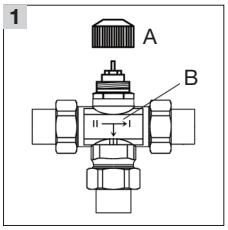

1. Remove (A) gray plastic cap from (B) valve body. (This cap can be used to adjust the water temperature manually.)

2

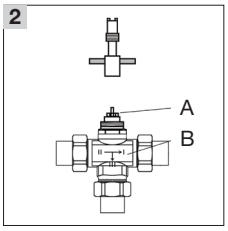

2. Loosen up (A) hex lock nut from the (B) valve body with brass key tool.

3

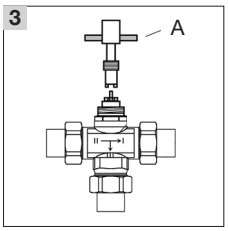

3. Use opposite side of (A) brass key tool and turn inner adjustment screw (slotted) clockwise until valve spring resistance is felt. To lower water temperature turn key clockwise; turn counterclockwise to raise it.

4

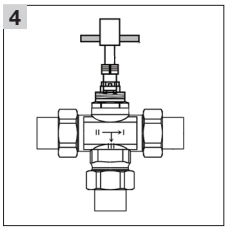

4. Turn adjustment screw further clockwise until desired supply water temperature is obtained and count quarter turns for reference. This has to be done carefully and slowly because each quarter turn of the adjustment screw will result in approximately 15°F temperature reduction. Wait until desired water temperature stays consistent.

This calibration must be done with the boiler at its highest temperature, the circulator running and all zones open

5

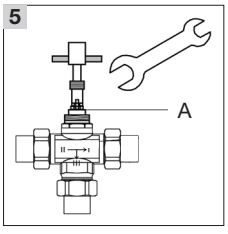

5. Tighten (A) hex lock nut with wrench. Do not overtighten. To secure high limit adjustment: hold slotted adjustment screw with brass key while tightening nut.

6.4 Initial Balancing

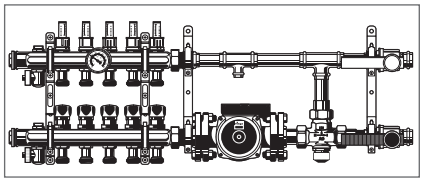

Many times it is not possible to design the system using equal circuit lengths, so the system must be balanced in order to ensure adequate flow to each circuit on a manifold.

Procedure:

1. Start with all valves wide open.
2. Turn the flow meter/balancing valve clockwise, decreasing the flow until the design flow is met.

7 Finish Flooring

7.1 Choosing a Finished Floor

There are three common types of finished floors used in residential construction: wood floors, tile/vinyl, and carpet.

When picking a finished floor, the lower the R-value, the better radiant heat will work. When using tile, the R-value will be low and therefore will work very well with your radiant system ("8 Appendix A: R-Value Table Floor Coverings" on page 58 lists some common tiles and their R-values). Vinyl flooring is another common choice for kitchens and baths and has a low R-value.

Using carpet over radiant heating requires careful planning. Viega's recommendation for a covering over a radiant system is to not exceed a total of a 2.5 R-value (the carpet pad plus the carpet itself). Remember that the pad and the carpet are insulators and will restrict the heat from getting into the room, so keeping the R-value of the pad and the carpet low is a must ("8 Appendix A: R-Value Table Floor Coverings" on page 58 lists some carpet and pad R-values). It may be necessary to add supplemental heat or install hydronic baseboards in rooms with heavy carpeting (see Viega's Combiflex system).

There are many questions regarding hardwood flooring over radiant heating. Armed with knowledge and a few precautions, hardwood floors and radiant heat will work well together. There are two important issues:

1. Floor surface temperatures
2. Moisture

7.1.1 Floor Surface Temperatures

For many builders, a reluctance to install hardwood floors over radiant heat stems from problems associated with incorrect control of the floor surface temperatures.

- Today, modern insulation and building techniques allow a radiant floor to stay cooler.
- The floor surface temperature should not exceed 85° F (refer to "3.4 Calculating the Floor Surface Temperature" on page 14).

Also be careful when using multiple or high R-value area rugs over hardwood flooring. Your radiant heating system must be designed with this additional R-value taken into account in order to perform properly. If the system was designed for bare wood flooring, adding area rugs may lead to a situation where heat output is diminished.

7.1.2 Moisture

Allow the radiant system to run for at least a week before installing the hardwood. This will ensure that the subfloor is dry. Wood flooring should be acclimated to the job site before installation. When checking the moisture content of the subfloor and wood flooring with a moisture meter, aim for a reading of 6% to 8%. Moisture will affect the hardwood floor with or without a radiant system.

- Moisture absorption causes wood to swell.
- Moisture loss causes wood to shrink.

If the moisture content of the wood is relatively high near the bottom of the plank, cupping upward will occur exaggerating cracks.

7.1.2.1 Dry Shrinkage

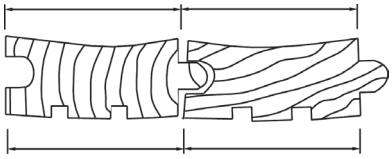

If the moisture content is relatively high near the top surface of the plank, it will crown downward on the edges.

7.1.2.2 Wet Expansion

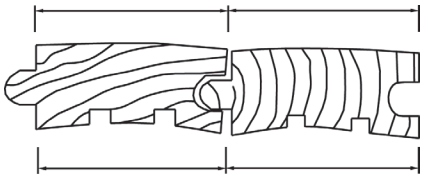

Sources from below:

- Inadequate moisture barrier
- Ground water wicking through the slab
- Unsealed subfloor

Sources from above:

- High relative humidity

Both solid plank flooring and engineered wood floors are acceptable choices over radiant heating.

Choosing narrower planks and harder woods minimizes dimensional change in the wood. Engineered wood flooring usually has less expansion and contraction and can be a good choice to minimize gaps between planks.

Follow the flooring manufacturer's installation manual or NOFMA's (National Oak Flooring Manufacturers Association) manual.

8 Appendix A: R-Value Table Floor Coverings

Material	⅛"	¼"	⅜"	½"	⅝"	¾"	⅞"	1"
Building Board								
Gypsum or Plaster Board	0.11	0.23	0.32	0.45	0.56	0.68	0.79	0.90
Plywood	0.16	0.31	0.47	0.62	0.77	0.93	1.09	1.24
Particleboard, low density	0.18	0.35	0.53	0.71	0.88	1.06	1.23	1.41
Particleboard, medium density	0.13	0.27	0.40	0.53	0.66	0.80	0.93	1.06
Particleboard, high density	0.11	0.21	0.32	0.43	0.53	0.64	0.74	0.85
Waferboard	0.20	0.40	0.60	0.80	0.99	1.19	1.39	1.59
Wood subfloor	0.16	0.31	0.47	0.62	0.78	0.93	1.09	1.24
Cement board	0.03	0.06	0.09	0.12	0.15	0.18	0.21	0.24
Tile								
Ceramic Tile	0.02	0.03	0.05	0.07	0.08	0.10	0.12	0.13
Marble	0.01	0.01	0.02	0.03	0.03	0.04	0.04	0.05
Granite	0.01	0.02	0.03	0.04	0.05	0.06	0.07	0.08
Slate	0.01	0.03	0.04	0.05	0.06	0.08	0.09	0.10
Linoleum or Vinyl	0.05	0.10	0.15	0.20	0.25	0.30	0.35	0.40
Rubber, hard	0.12	0.24	0.36	0.48	0.60	0.72	0.84	0.96
Cork Tile	0.28	0.56	0.84	1.12	1.40	1.68	1.96	2.24
Carpet Pad								
Waffled Sponge Rubber	0.20	0.41	0.61	0.81	1.01	1.22	1.42	1.62
Synthetic Jute	0.43	0.86	1.28	1.71	2.14	2.57	2.99	3.42
Bonded Urethane, 4 lb Density	0.52	1.05	1.57	2.09	2.61	3.14	3.66	4.18
Bonded Urethane, 8 lb Density	0.55	1.10	1.65	2.20	2.75	3.30	3.85	4.40
Prime Urethane, 2.2 lb Density	0.54	1.08	1.61	2.15	2.69	3.23	3.76	4.30
Carpet								
Acrylic Level Loop	0.52	1.04	1.56	2.08	2.60	3.12	3.64	4.16
Acrylic Level Loop w/Foam Back	0.51	1.02	1.53	2.04	2.55	3.06	3.57	4.08
Acrylic Plush	0.43	0.86	1.29	1.72	2.15	2.58	3.01	3.44
Polyester Plush	0.48	0.96	1.44	1.92	2.40	2.88	3.36	3.84
Nylon Level Loop	0.68	1.36	2.04	2.72	3.40	4.08	4.76	5.44
Nylon Plush	0.26	0.52	0.78	1.04	1.30	1.56	1.82	2.08
Nylon Shag	0.27	0.54	0.81	1.08	1.35	1.62	1.89	2.16
Nylon Saxony	0.44	0.88	1.32	1.76	2.20	2.64	3.08	3.52
Wool Plush	0.55	1.10	1.65	2.20	2.75	3.30	3.85	4.40
Hardwood								
Ash	0.15	0.30	0.45	0.60	0.75	0.90	1.05	1.20
Beech	0.12	0.24	0.36	0.48	0.60	0.72	0.84	0.96
Cherry	0.15	0.30	0.45	0.60	0.75	0.90	1.05	1.20
Elm	0.14	0.28	0.42	0.56	0.70	0.84	0.98	1.12
Maple	0.13	0.26	0.39	0.52	0.65	0.78	0.91	1.04
Oak	0.15	0.30	0.45	0.60	0.75	0.90	1.05	1.20
Cedar	0.23	0.46	0.69	0.92	1.15	1.38	1.61	1.84
Fir	0.15	0.30	0.45	0.60	0.75	0.90	1.05	1.20
Hemlock	0.18	0.36	0.54	0.72	0.90	1.08	1.26	1.44
Pine	0.20	0.40	0.60	0.80	1.00	1.20	1.40	1.60
Redwood	0.20	0.40	0.60	0.80	1.00	1.20	1.40	1.60
Spruce	0.20	0.40	0.60	0.80	1.00	1.20	1.40	1.60
Engineered Flooring								
Laminated Parquet Flooring	0.11	0.23	0.34	0.45	0.57	0.68	0.79	0.91

9 Appendix B: Supply Water Temperature/BTU Output Charts

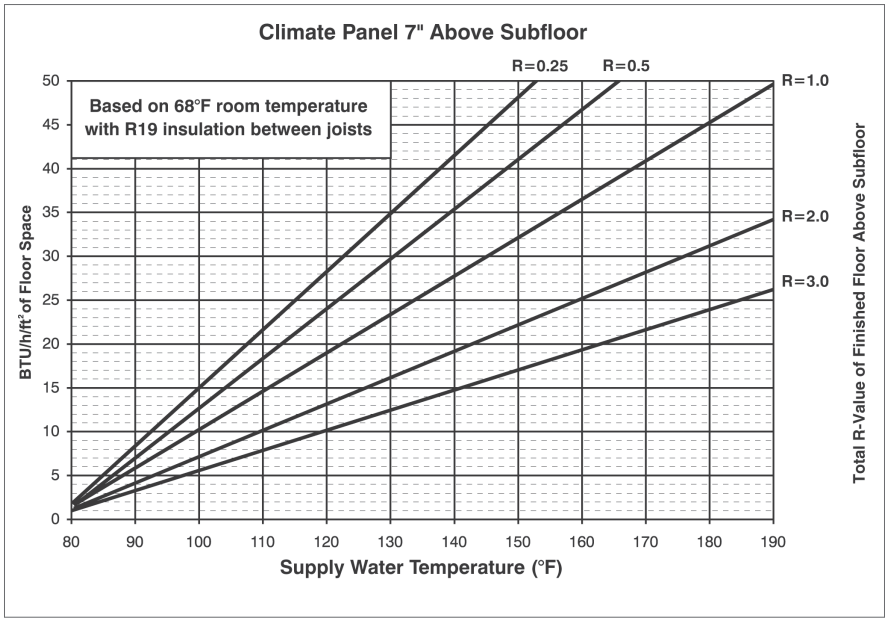

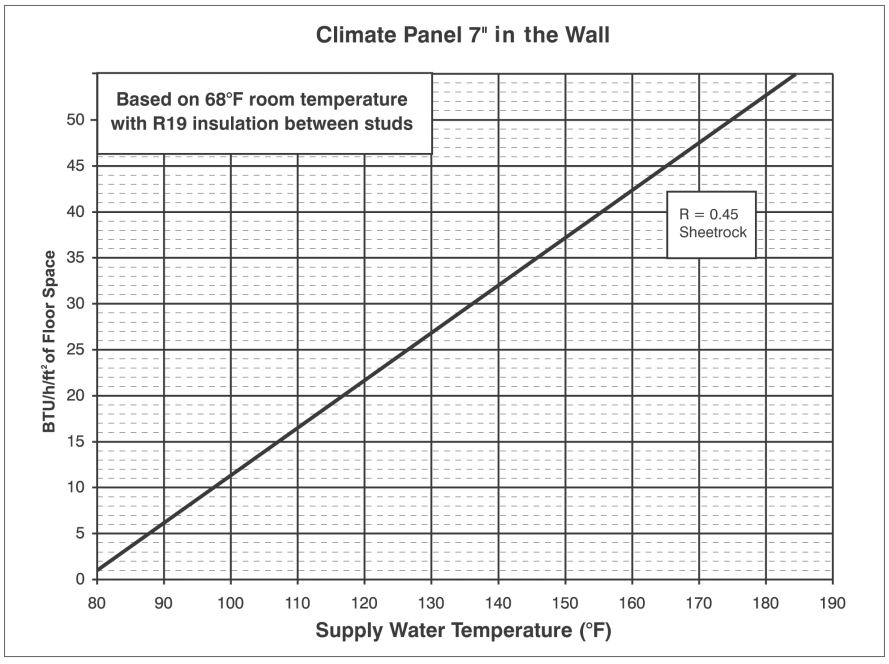

10 Appendix C: Repairing Damaged Tubing within Climate Panel

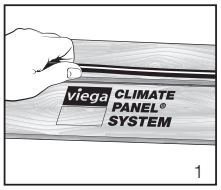

1. Pull the damaged section of Viega Barrier PEX tubing out of the groove in the Climate Panel. Remove the old Groove Tube adhesive from the tubing and the groove in the Climate Panel.

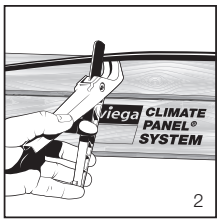

2. Cut out the damaged section of tubing.

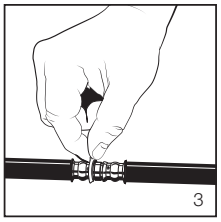

3. Install the 5⁄16" Press repair coupling per Viega's PureFlow Press Fittings Product Instructions. If multiple areas are damaged or punctured it may be necessary to remove a larger section of tubing and replace it with new tubing and two couplings. Remove the tool locator rings.

If using a compression coupling for the repair(s), see the section below on making a compression connection.

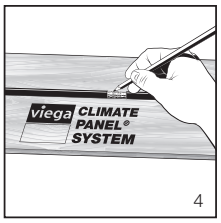

4. Place the repair coupling(s) against the Climate Panel. Trace the profile of the repair coupling onto the Climate Panel.

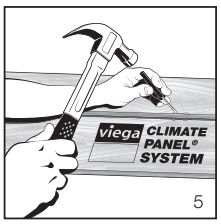

5. Using a wood chisel, follow the traced line and remove enough wood from the Climate Panel so that the fitting will fit comfortably into the panel.

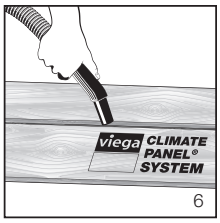

6. Vacuum up any dried Groove Tube or wood debris in the area of the repair. Be sure to remove any splinters or aluminum burrs left behind that might damage the tubing.

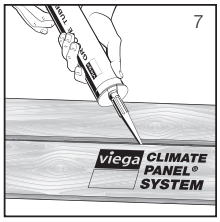

7. Run a new bead of Groove Tube down the tubing channel and into and out of the repair fitting area in the Climate Panel.

8. Push the tubing and fitting(s) permanently into place.

It is important to be sure the fitting is below the surface of the Climate Panel when complete.

11 Appendix D: Tool List

11.1 Installation (Power Tools)

- Radial arm chop saw (12" recommended), optional sliding arm recommended also (less than 12" won't chop through the 7" ACP).
- Skill saw or portable table saw for ripping down panels.
- Staple gun with hose and compressor (7/16" to ½" crown by 1¼" or 1½") staples.
- Alternative to the staple gun is a stand-up screw gun with self-feeding 1¼" to 1¾" screws (depending upon the application).
- Battery-operated screw gun for clips, touchups, hanging manifolds and blocks, to hold tubing down at floor penetration.
- Drill with bit kit - hole saw kit.
- Saw used for opening base of wall or cutting through plates to run multi-tubing lines through.

11.2 Installation (Hand Tools)

- Tape measure (recommended one per person).
- Chalk line.
- Utility knives for cutting aluminum sheets and nipping corners.
- Hammer for hammering down staples that were not fully embedded and miscellaneous uses.
- Rubber mallet.
- Caulking gun.
- Tubing cutter.
- Chisel to clean up floor penetration holes to create a ramp-like drop.
- Adjustable wrench.

11.3 Pre/Post Installation

- Shop-vac for cleaning out grooves before silicone and tubing are installed.
- Broom for pre-installation clean up of areas.
- Ice scraper used to scrape up globs of plaster or other material that would obstruct panels to lay flat.

11.4 Miscellaneous

- Saw horses to make table for chop saw.
- Portable lights.
- Extension cords.
- Calculator (recommended).
- Sharpie marker allows for more visible markings on dusty floors or concrete.
- Knee pads recommended wearing when installing tubing into tracks.
- Decoiler.

12 Appendix E: Making a Material List

12.1 Climate Panel Material Worksheet

Material	Net Heated Area (ft)	Multiplier	Estimated Amount
7" Panels		0.4	
U-Turns		0.04	
Tubing (7" Spacing)		1.9	
Groove Tube		0.02	
Screws		5.4	
Staples		5.4	
Multi-Run Panel		0.014	
Multi-Run Access Panel		0.017	
Multi-Run Ninety Panel		0.014	

Table 16: Climate Panel Material Worksheet

12.2 Piping and Controls Material Worksheet

12.2.1 One-Room Application Material Worksheet

Product	Quantity
Hydronic Mixing Block	
Enhanced Mixing Station	
Mixing Station	
Actuator	
1¼" Stainless Manifold, # Outlets	
Basic Heating Control	
Indoor Sensor	
ViegaPEX Barrier Tubing	
Zone Control	
Thermostat	
Powerhead	
FostaPEX Tubing	
PEX Press Adapters	
Compression PEX Adapters	

Table 17: One-Room Application Material Worksheet

12.2.2 Multiple-Room Application Material Worksheet

Product	Quantity
Hydronic Mixing Block	
Enhanced Mixing Station	
Mixing Station	
Actuator	
1¼" Stainless Manifold, # Outlets	
Basic Heating Control	
Viega Barrier PEX Tubing	
Zone Control	
Thermostat	
Powerhead	
FostaPEX Tubing	
PEX Press Adapters	
Compression PEX Adapters	
Zone Valve	

Table 18: Multiple-Room Application Material Worksheet

13 Appendix F: Additional References

13.1 Making a Press Connection

To make a fitting connection with Viega Barrier PEX or FostaPEX tubing, see the PureFlow Press Fittings Product Instructions on the Viega website.

13.2 Making a Compression Connection

To make a compression connection, see Compression Coupling 5/16 Inch Product Instructions on the Viega website.

13.3 SVC Press Adapter

To make an SVC press adapter connection to a manifold or fitting, see SVC Press Adapter Product Instructions on the Viega website.

13.4 SVC Compression Adapter

To make an SVC compression adapter connection, see SVC Compression PEX Adapter Product Instructions on the Viega website.

14 Limited Warranty

14.1 Limited Warranty for Viega Heating and Cooling Solutions

Hydronic Radiant Heating/Cooling and Snow Melt

Subject to the conditions and limitations in this Limited Warranty, Viega LLC (Viega) warrants to property owners in the United States with hydronic radiant heating/cooling and/or snow melt systems (the systems) properly installed by Viega trained contractors that its Viega Barrier PEX and FostaPEX® tubing, under normal conditions of use and properly maintained, will be free from failure caused by manufacturing defect for a period of thirty (30) years from date of installation.

In addition, Viega warrants that Viega PEX press metal and polymer fittings properly installed in the systems with the above listed tubing, to include protected PEX press metal and polymer fittings used in slab, will be free from failure caused by manufacturing defect for a period of thirty (30) years from date of initial installation; warrants that any accessible metal compression or metal/polyalloy crimp fittings, manifolds and panels sold by Viega and used in the systems will be free from failure caused by manufacturing defect for a period of five (5) years, and warrants that any controls, mixing stations, or electrical components sold by Viega and used in the systems will be free from failure caused by manufacturing defect for a period of two (2) years from date of initial installation.

Power tools and jaws used with press fittings are warranted by the manufacturer and Viega extends no separate warranty on those tools or jaws. Viega warrants that PEX press hand and pneumatic PEX hammer tools sold by Viega, under normal conditions of use, shall be free from failure caused by manufacturing defects for a period of two (2) years from date of sale.

Under this limited warranty, you only have a right to reimbursement if the failure or leak resulted from a manufacturing defect in the products covered by this warranty and the failure or leak occurred during the warranty period. You do not have a remedy or right of reimbursement under this warranty and the warranty does not apply if the failure or any resulting damage is caused by (1) components in the systems other than those manufactured or sold by Viega or components not recommended for use in the systems (2) not installing, inspecting, or testing the products covered by this warranty in accordance with Viega's installation instructions at the time of the installation, applicable code requirements and accepted industry practices (for example, guidelines of the Radiant Professionals Alliance); (3) improper design, including determining proper heat-load of the system, or improper maintenance of the system; (4) exposure to unauthorized solvents or chemicals, antifreeze, rust inhibitor or other treatment fluids; freezing; or by failure to appropriately limit recommended water temperature levels or other misuse or abuse of the

tubing in the handling of the tubing prior to or during installation or by other construction activity on the property; (5) acts of nature such as earthquakes, fire, flood, wind, or lightning.

In the event of a leak or other failure in the system, it is the responsibility of the property owner to obtain and pay for the repairs. Only if the warranty applies will Viega be responsible for reimbursement under this warranty. The part or parts which you claim failed should be kept and Viega contacted by writing to the address below or telephoning 1-800-976-9819 within thirty (30) days after the leak or other failure and identifying yourself as having a warranty claim. You should be prepared to ship, at your expense, the product which you claim failed due to a manufacturing defect, document the date of installation, and the amount of any claimed bills for which you claim reimbursement. Within a reasonable time after notification, Viega will investigate the reasons for the failure, which includes the right to inspect the product at Viega and reasonable access to the site of the damage in order to determine whether the warranty applies. Viega will notify you in writing of the results of its review.

In the event that Viega determines that the failure or leak and any resulting damages were the result of a manufacturing defect in the products covered by this warranty and occurred during the first ten years of the time period covered by this warranty, Viega will reimburse the property owner for reasonable repair or replacement charges resulting from the failure or leak and, additionally will reimburse damages to personal property resulting from the failure or leak. After the first ten years of the time period covered by this warranty, the EXCLUSIVE and ONLY remedy will be reimbursement for repair and replacement of the product covered by this warranty. VIEGA SHALL NOT BE LIABLE FOR CONSEQUENTIAL ECONOMIC LOSS DAMAGES UNDER ANY LEGAL THEORY AND WHETHER ASSERTED BY DIRECT ACTION, FOR CONTRIBUTION OR INDEMNITY OR OTHERWISE.

THE ABOVE LIMITED WARRANTY IS IN LIEU OF ALL OTHER WARRANTIES, EXPRESS OR IMPLIED, INCLUDING BUT NOT LIMITED TO, THE IMPLIED WARRANTIES OF MERCHANTABILITY AND FITNESS FOR A PARTICULAR PURPOSE. IF FOUND APPLICABLE, ANY IMPLIED WARRANTIES ARE LIMITED TO THE DURATION OF ANY TIME LIMITS SET OUT IN THIS WRITTEN WARRANTY. Other than this limited warranty, Viega does not authorize any person or firm to create for it any other obligation or liability in connection with its products. This written warranty applies for the full term of the applicable warranty regardless of any change of ownership of the property.

In the event that the tubing or fittings covered by this warranty are used in potable water plumbing systems, the Viega Limited Warranty for Viega PEX Water Systems will apply.

Some states do not allow the exclusion or limitation of incidental or consequential damages or limitations on the duration of implied warranties in certain types of transactions, so the above exclusion or limitations may not apply to you. This limited warranty gives you specific legal rights and you also may have other rights which vary from state to state. This warranty shall be interpreted and applied under the law of the state in which the product is installed.

Viega LLC
585 Interlocken Blvd.
Broomfield, CO 80021

Phone (800) 976-9819
www.viega.us

IM-HC 530662 0620 Climate Panel (EN)

©2020, Viega®, FostaPEX®, GeoFusion®, ManaBloc®, MegaPress®, ProPress®, SeaPress®, Smart Connect®, Climate Mat®, Climate Panel®, Climate Trak®, PureFlow®, XL®, XL-C®, Visign®, Visign for Style®, Visign for More®, Visign for Care®, Visign for Public®, Viega Eco Plus®, and Viega: Connected in quality® are trademarks of Viega Holding GmbH & Co. KG. Eco Brass® is a registered trademark of Mitsubishi Shindoh Co., LTD. RIDGID® is a registered trademark of RIDGID, Inc. LoopCAD® is a registered trademark of Avenir Software Inc. Radel® R is a registered trademark of Solvay Advanced Polymers, LLC. LEED® is a registered trademark of the U.S. Green Building Council®.